FOR DIMENSIONAL TOLERANCES OF SHEET METAL PARTS AND WELDED STRUCTURES, REFER STD. RD-227

UNSPECIFIED TOLERANCE FOR LINEAR AND ANGULAR DIMENSIONS REF. IS 2102 (PT-1) (MEDIUM)

VALUES OF SURFACE TEXTURE SHALL BE AS PER COMPANY STD DS.1012.C.

QUALITY OF WELD JOINTS REF, RD-230 MEDIUM

~~PROTO/PILOT~~/PRODUCTION

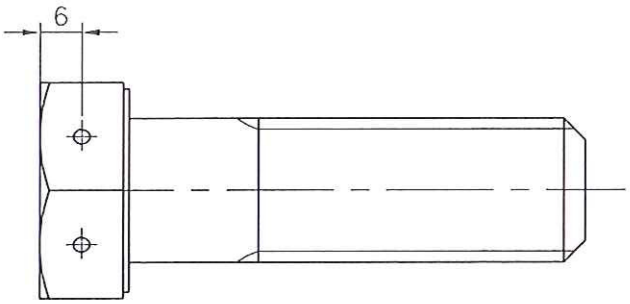

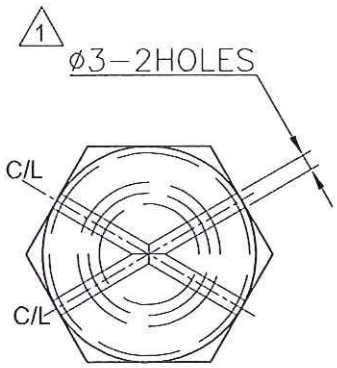

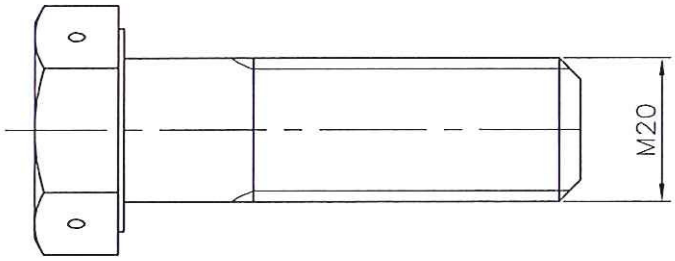

2

NOTE

1. THE ITEM SHALL BE MADE FROM HEX. HD. BOLT TO SPEC. IS:1364(PART 2)-02,PC-10.9

2

UN CONTROLLED COPY

SL No.	QTY	DRG. / STOCK No.	DESCRIPTION	SIZE	COMPANY.STD/IS.STD	Wt.Kg.
				M20x65, TO IS:1364(PART 2)-02,PC-10.9, GEOMET COATING TO SPEC ASTM F1136 GR-6 WITH BLACK TOP COAT		
		DETAIL PARTS		MATERIAL		

PRODUCT METRO BOGIE

ALT	CHANGES / ECN No.	DATE	BY	CKD	APP
2 X1	HARDWARE COATING GEOMET WAS DACROTIZE, NOTE UPDATED. ECN No. 90900563	12.2.16	ILYAS		
1 X2	Ø 3 WAS Ø2 COATING SPEC. REVISED TO Gr.-6 WITH BLACK TOP COAT ECN No. 90900025	15.6.11	ILYAS	KSRR	JP

QTY	NEXT ASSY	MODEL
4	909-82401	M / DT / T

SURFACE TREATMENT

APPROVED	JP	25.2.08
CHECKED	KSRR	25.2.08
DRAWN	ILYAS	4.1.08
REF DRG		

SCALE 1:1 | SHEET 1 OF 1 | Wt (Kg) 0.24

BEML LIMITED
R&D, BANGALORE COMPLEX
BANGALORE 560 075

TITLE BOLT, HEX. HD. HOLE

DRG No. 909-82119

ALT 2

GRADE No.	N12	N11	N10	N9	N8	N7	N6	N5	N4	N3	N2	N1
VALUE	50	25	12.5	6.3	3.2	1.6	0.8	0.4	0.2	0.1	0.05	0.025
SYMBOL												

SURFACE ROUGHNESS