FOR DIMENSIONAL TOLERANCES OF SHEET METAL PARTS AND WELDED STRUCTURES, REFER STD. RD-227

UNSPECIFIED TOLERANCE FOR LINEAR AND ANGULAR DIMENSIONS REF. IS 2102 (PT-1) (MEDIUM)

VALUES OF SURFACE TEXTURE SHALL BE AS PER COMPANY STD DS.1012.C.

QUALITY OF WELD JOINTS REF. RD-230 MEDIUM

PROTO/~~PILOT/PRODUCTION~~

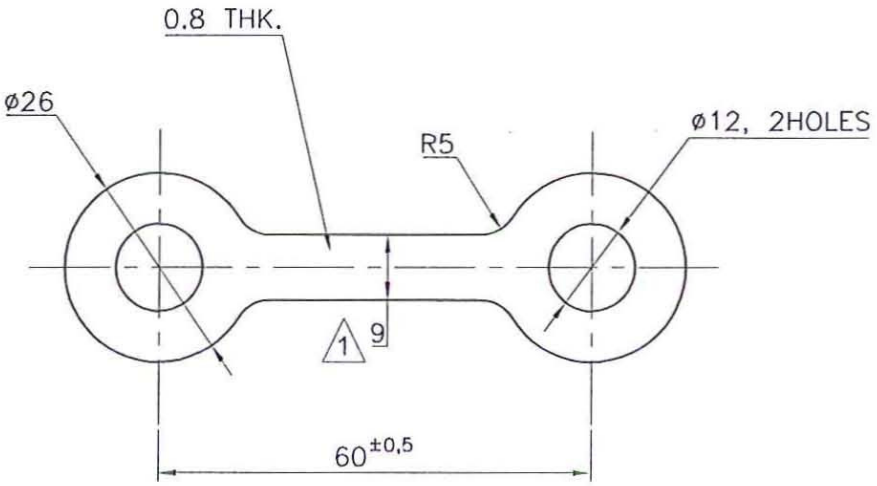

NOTE

1. PART SHALL BE ZINC PLATED AS PER SERVICE GRADE No. 2 OF IS: 1573-86 AND CHROMATE PASSIVATED TO COLOUR IRIDESCENT YELLOW

UN CONTROLLED COPY

SL No.	QTY	DRG. / STOCK No.	DESCRIPTION	SIZE	COMPANY.STD/IS.STD	Wt.Kg.
		C100603080		86x26x0.8THK.	IS: 513-94, Gr.-O	
		DETAIL PARTS		MATERIAL		

PRODUCT: METRO BOGIE

SURFACE TREATMENT

APPROVED	JP	16.4.08
CHECKED	KSRR	16.4.08
DRAWN	ILYAS	4.1.08
REF DRG	1110	

ALT	CHANGES / ECN No.	DATE	BY	CKD	APP
1	DIMN. 9 ADDED ECN No. 90900661	01/09/17	ILYAS		

QTY	NEXT ASSY	MODEL
3	909-81009	909

SCALE 1:1 | SHEET OF | Wt (Kg) 0.008

BEML LIMITED
R&D, BANGALORE COMPLEX
BANGALORE 560 075

TITLE: WASHER, LOCKING

DRG No. 909-81134

ALT 1

GRADE No.	N1	N2	N3	N4	N5	N6	N7	N8	N9	N10	N11	N12
VALUE	0.025	0.05	0.1	0.2	0.4	0.8	1.6	3.2	6.3	12.5	25	50
SYMBOL												

SURFACE ROUGHNESS