| MACHINING DEVIATIONS FOR LINEAR DIMENSIONS | RANGE | 0 – 6 | 6 – 30 | 30 – 120 | 120 – 315 | 315–1000 | 1000–2000 | 2000–4000 | ABOVE 4000 |
|---|---|---|---|---|---|---|---|---|---|
| | TOLERANCE | ±0.1 | ±0.2 | ±0.3 | ±0.5 | ±0.8 | ±1.2 | ±2 | ±3 |

FOR DIMENSIONAL TOLERANCES OF SHEET METAL PARTS AND WELDED STRUCTURES, REFER STD. RD–227

UNSPECIFIED TOLERANCE FOR LINEAR AND ANGULAR DIMENSIONS REF. IS 2102 (PT–1) (MEDIUM)

VALUES OF SURFACE TEXTURE SHALL BE AS PER COMPANY STD DS. 1012.C.

QUALITY OF WELD JOINTS REF, RD–230 MEDIUM

PROTO / ~~PILOT / PRODUCTION~~

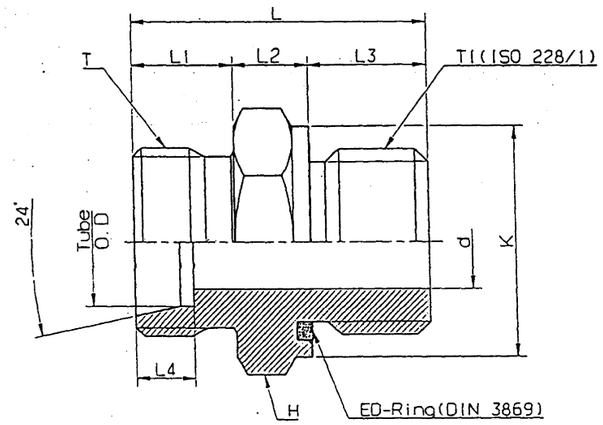


SPECIFICATION

1. PRESSURE RANGES: O.D 8mm – O.D 15mm
   Max. 315 Bar (4.567 psi)
2. ALLOWABLE WORKING TEMPERATURES
   *FITTING MATERIAL: –60 °C UPTO +400 °C (DIN 17440)
   *SEAL MATERIAL: –35 °C UPTO +100 °C
3. TO BE MANUFACTURED ACCORDING TO DIN 3853, 3861, 3901
4. UNIT: mm

UNCONTROLLED COPY

| PART NO. | Tube O.D | d | H | K | L | L1 | L2 | L3 | L4 | T | T1 | WEIGHT(Kg) |
|---|---|---|---|---|---|---|---|---|---|---|---|---|
| 909–60721 | 15 | 11 | 27 | 27 | 35 | 12 | 9 | 14 | 7 | M22x1.5P | G1/2" | 0.07 |

| SL No. | QTY | DRG. / STOCK No. | DESCRIPTION | SIZE | COMPANY.STD/IS.STD | Wt.Kg. |
|---|---|---|---|---|---|---|
| | | DETAIL PARTS | | MATERIAL | | |

PRODUCT DMRC 8 CAR

SURFACE TREATMENT

APPROVED Amit Sanyjeo
CHECKED M. Sudhan
DRAWN A. L. ch Rajkumar
REF DRG EF01223–401

| ALT | CHANGES / ECN No. | DATE | BY | CKD | APP | QTY | NEXT ASSY | MODEL |
|---|---|---|---|---|---|---|---|---|

SCALE NTS | SHEET 1 of 1 | Wt (Kg)

BEML LIMITED
R&D, BANGALORE COMPLEX
BANGALORE 560 075

TITLE CONNECTING PIECE

DRG No. 909–60722

ALT

A3

| GRADE No. | N12 | N11 | N10 | N9 | N8 | N7 | N6 | N5 | N4 | N3 | N2 | N1 |
|---|---|---|---|---|---|---|---|---|---|---|---|---|
| VALUE | 50 | 25 | 12.5 | 6.3 | 3.2 | 1.6 | 0.8 | 0.4 | 0.2 | 0.1 | 0.05 | 0.025 |
| SYMBOL | | | | | | | | | | | | |

SURFACE ROUGHNESS