COPY RIGHT & CONFIDENTIAL THIS DOCUMENT IS THE EXCLUSIVE PROPERTY OF BEML & CONTAINS CONFIDENTIAL INFORMATION. THIS DOCUMENT OR ITS CONTENTS SHALL NOT BE USED, REPRODUCED OR DISCLOSED IN WHOLE OR IN PART, WITHOUT PRIOR WRITTEN PERMISSION OF BEML. THIS DOCUMENT & ALL ITS COPIES SHALL BE RETURNED TO BEML ON DEMAND
DRAWING RELEASED FROM PLM, PHYSICAL SIGNATURE NOT REQUIRED

MACHINING DEVIATIONS FOR LINEAR DIMENSIONS	RANGE	0 - 6	6 - 30	30 - 120	120 - 315	315-1000	1000-2000	2000-4000	ABOVE 4000	RA
	TOLERANCE	±0.1	±0.2	±0.3	±0.5	±0.8	±1.2	±2	±3	~

FOR DIMENSIONAL TOLERANCES OF SHEET METAL PARTS AND WELDED STRUCTURES, REFER STD. RD-227

UNSPECIFIED TOLERANCE FOR LINEAR AND ANGULAR DIMENSIONS REF. IS 2102 (PT-1) (MEDIUM) | QUALITY OF WELD JOINTS REF, RD 230 MEDIUM

VALUES OF SURFACE TEXTURE SHALL BE AS PER COMPANY STD DS. 1012.C.

WELDING SHALL BE CARRIED OUT AS PER IS: 9595-96

STATUS:

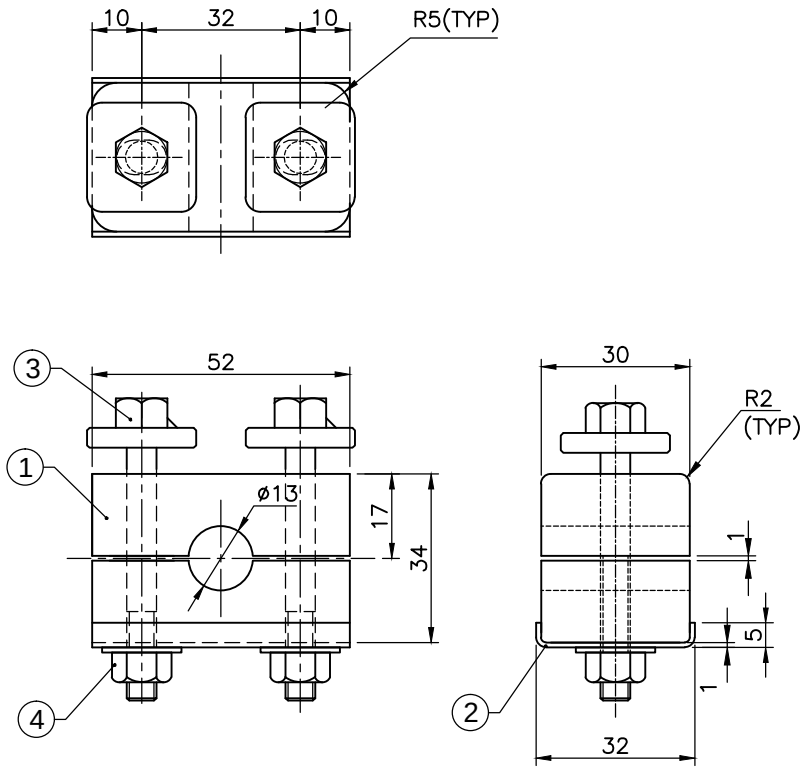

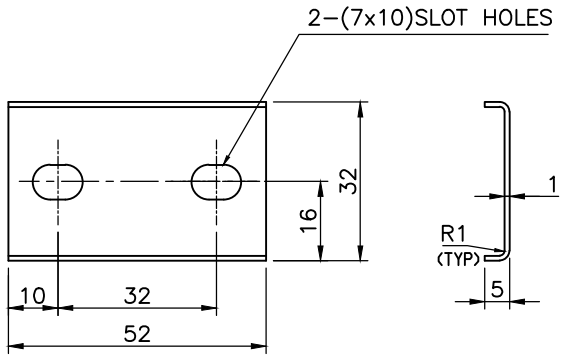

DETAIL-2

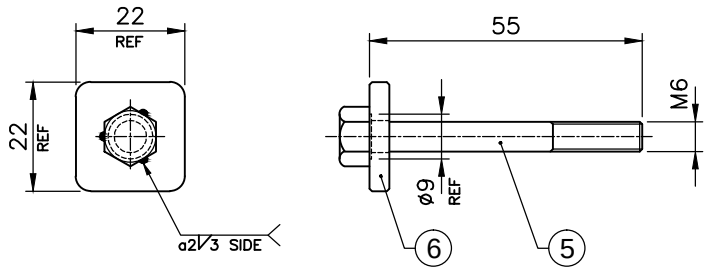

DETAIL-3

NOTE:

1. REMOVE ALL SHARP EDGES
2. FOR CLEATS Min TENSILE STRENGTH: 65 N/mm²
3. BURNING RESISTANCE : SELF EXTINGUISH.
4. ITEM-1 SHALL CONFIRM TO EN45545-HL-3

UNCONTROLLED

SL.No.	QTY	PART / STOCK No.	DESCRIPTION	SIZE	MATERIAL: COMPANY STD./I.S	Wt. (Kg)
6	2	555-56360	PAD			
5	2	RFB1420655	HEX.HD.BOLT M6x55 TO IS:1364(Pt-3)-2002/ Matl.:-IS-1367(P14)-84 Gr A2-70, STAINLESS STEEL WITH PRE APPLIED ADHESIVE			
4	2	RFN5540652	HEX. NUT WITH FLANGE M6 TO ISO 7044-83/ Matl.:-IS-1367(P14)-84 Gr A2-70, STAINLESS STEEL			
3	2	525-56131-3	T-BOLT ASSY		ASSY	
2	1	525-56131-2	PLATE	t1	AISI 304	
1	2	525-56131-1	CLEAT		NYLON6	

ALT.NO.	ECN NO/CHANGES	DATE	BY	CHKD	APPD

PRODUCT: MUMBAI METRO CARS L2 & L7

REF DRG:

MATERIAL:

HEAT TREAT.:

SURFACE TREAT.:

TITLE: CLEAT ASSY, PG9

APPD: VS

REVD:

CHKD: SNH

DRWN: JAGADISH 27.8.19

SCALE: SHEET: OF: Wt.(Kg): 0

BEML LIMITED

DRG No. 525-56131

ALT

A3

GRADE No.	N12	N11	N10	N9	N8	N7	N6	N5	N4	N3	N2	N1
VALUE	50	25	12.5	6.3	3.2	1.6	0.8	0.4	0.2	0.1	0.05	0.025
SYMBOL	~											

SURFACE ROUGHNESS

COPY RIGHT & CONFIDENTIAL THIS DOCUMENT IS THE EXCLUSIVE PROPERTY OF BEML & CONTAINS CONFIDENTIAL INFORMATION. THIS DOCUMENT OR ITS CONTENTS SHALL NOT BE USED, REPRODUCED OR DISCLOSED IN WHOLE OR IN PART, WITHOUT PRIOR WRITTEN PERMISSION OF BEML. THIS DOCUMENT & ALL ITS COPIES SHALL BE RETURNED TO BEML ON DEMAND
DRAWING RELEASED FROM PLM, PHYSICAL SIGNATURE NOT REQUIRED

MACHINING DEVIATIONS FOR LINEAR DIMENSIONS	RANGE	0 - 6	6 - 30	30 - 120	120 - 315	315-1000	1000-2000	2000-4000	ABOVE 4000	RA
	TOLERANCE	±0.1	±0.2	±0.3	±0.5	±0.8	±1.2	±2	±3	~

FOR DIMENSIONAL TOLERANCES OF SHEET METAL PARTS AND WELDED STRUCTURES, REFER STD. RD-227

UNSPECIFIED TOLERANCE FOR LINEAR AND ANGULAR DIMENSIONS REF. IS 2102 (PT-1) (MEDIUM) | QUALITY OF WELD JOINTS REF, RD 230 MEDIUM

VALUES OF SURFACE TEXTURE SHALL BE AS PER COMPANY STD DS. 1012.C.

WELDING SHALL BE CARRIED OUT AS PER IS: 9595-96

STATUS:

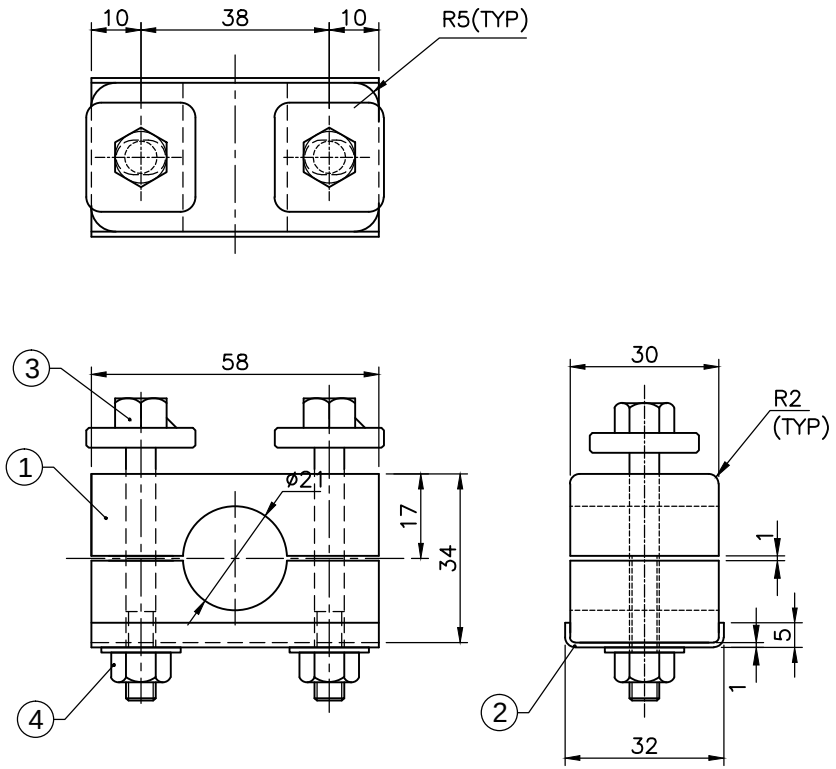

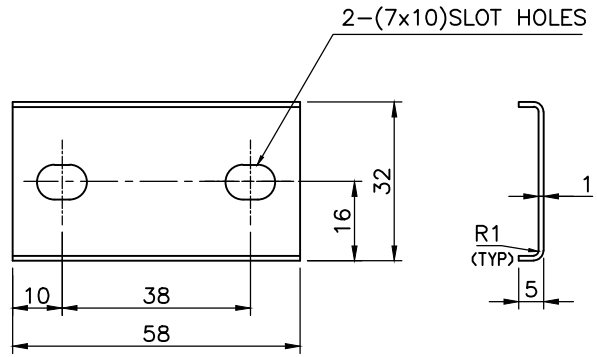

DETAIL-2

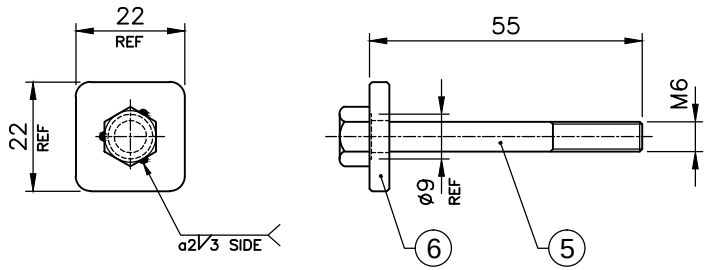

DETAIL-3

NOTE:

1. REMOVE ALL SHARP EDGES
2. FOR CLEATS Min TENSILE STRENGTH: 65 N/mm²
3. BURNING RESISTANCE : SELF EXTINGUISH.
4. ITEM-1 SHALL CONFIRM TO EN45545-HL-3

UNCONTROLLED

SL.No.	QTY	PART / STOCK No.	DESCRIPTION	SIZE	MATERIAL	Wt. (Kg)
6	2	555-56360	PAD			
5	2	RFB1420655	HEX.HD.BOLT M6x55 TO IS:1364(Pt-3)-2002/ Matl.:-IS-1367(P14)-84 Gr A2-70, STAINLESS STEEL WITH PRE APPLIED ADHESIVE			
4	2	RFN5540652	HEX. NUT WITH FLANGE M6 TO ISO 7044-83/ Matl.:-IS-1367(P14)-84 Gr A2-70, STAINLESS STEEL			
3	2	525-56132-3	T-BOLT ASSY		ASSY	
2	1	525-56132-2	PLATE	t1	AISI 304	
1	2	525-56132-1	CLEAT		NYLON6	

ALT.NO.	ECN NO/CHANGES	DATE	BY	CHKD	APPD

PRODUCT	MUMBAI METRO CARS L2 & L7		
REF DRG	CP60001-402		
MATERIAL			
HEAT TREAT.		APPD	VS
SURFACE TREAT.		REVD	
TITLE	CLEAT ASSY, PG16	CHKD	SNH
		DRWN	JAGADISH 27.8.19
		SCALE	SHEET OF / Wt.(Kg) 0
BEML LIMITED		DRG No.	525-56132
		ALT	

A3

SURFACE ROUGHNESS	N1	N2	N3	N4	N5	N6	N7	N8	N9	N10	N11	N12
VALUE	0.025	0.05	0.1	0.2	0.4	0.8	1.6	3.2	6.3	12.5	25	50

COPY RIGHT & CONFIDENTIAL THIS DOCUMENT IS THE EXCLUSIVE PROPERTY OF BEML & CONTAINS CONFIDENTIAL INFORMATION. THIS DOCUMENT OR ITS CONTENTS SHALL NOT BE USED, REPRODUCED OR DISCLOSED IN WHOLE OR IN PART, WITHOUT PRIOR WRITTEN PERMISSION OF BEML. THIS DOCUMENT & ALL ITS COPIES SHALL BE RETURNED TO BEML ON DEMAND. DRAWING RELEASED FROM PLM, PHYSICAL SIGNATURE NOT REQUIRED

MACHINING DEVIATIONS FOR LINEAR DIMENSIONS	RANGE	0 - 6	6 - 30	30 - 120	120 - 315	315-1000	1000-2000	2000-4000	ABOVE 4000	RA
	TOLERANCE	±0.1	±0.2	±0.3	±0.5	±0.8	±1.2	±2	±3	~

FOR DIMENSIONAL TOLERANCES OF SHEET METAL PARTS AND WELDED STRUCTURES, REFER STD. RD-227

UNSPECIFIED TOLERANCE FOR LINEAR AND ANGULAR DIMENSIONS REF. IS 2102 (PT-1) (MEDIUM) | QUALITY OF WELD JOINTS REF, RD 230 MEDIUM

VALUES OF SURFACE TEXTURE SHALL BE AS PER COMPANY STD DS. 1012.C.

WELDING SHALL BE CARRIED OUT AS PER IS: 9595-96

STATUS:

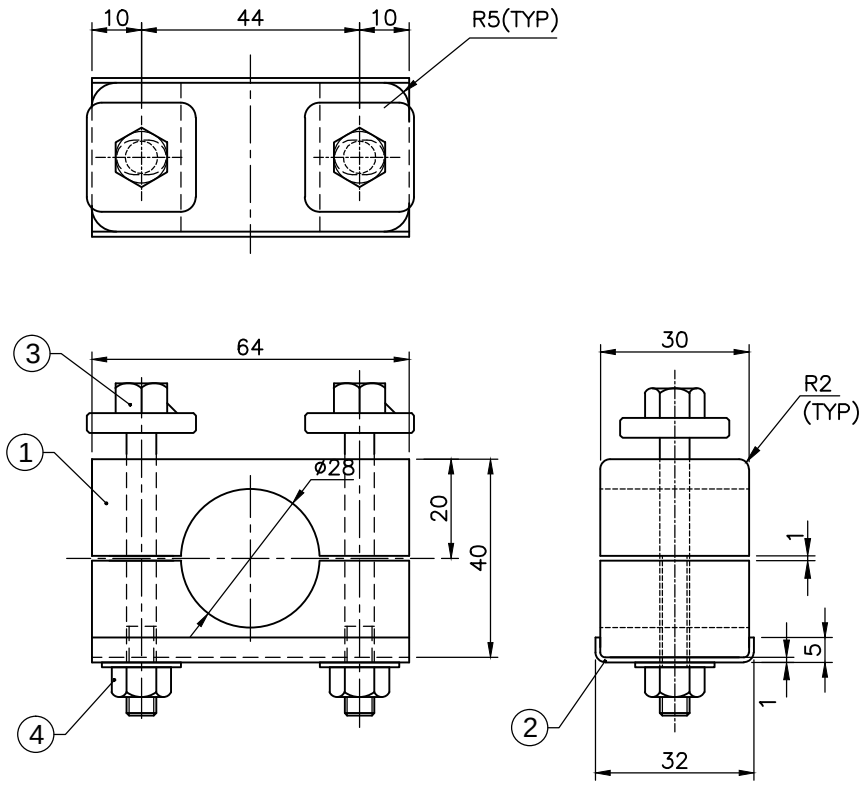

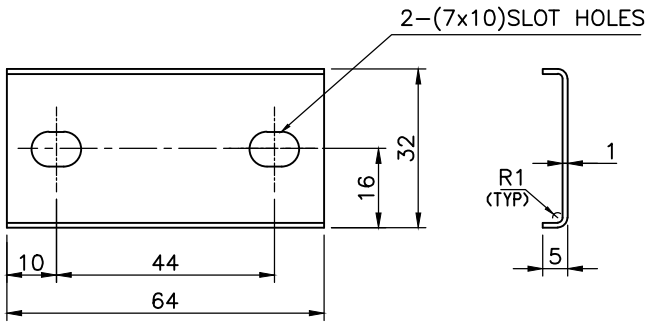

DETAIL-2

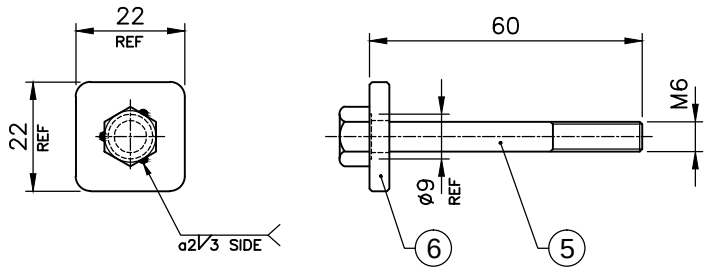

DETAIL-3

NOTE:

1. REMOVE ALL SHARP EDGES
2. FOR CLEATS Min TENSILE STRENGTH: 65 N/mm²
3. BURNING RESISTANCE : SELF EXTINGUISH.
4. ITEM-1 SHALL CONFIRM TO EN45545-HL-3

UNCONTROLLED

SL.No.	QTY	PART / STOCK No.	DESCRIPTION	SIZE	MATERIAL	Wt. (Kg)
6	2	555-56360	PAD			
5	2	RFB1420660	HEX.HD.BOLT M6x60 TO IS:1364(Pt-3)-2002/ Matl.:-IS-1367(P14)-84 Gr A2-70, STAINLESS STEEL WITH PRE APPLIED ADHESIVE			
4	2	RFN5540652	HEX. NUT WITH FLANGE M6 TO ISO 7044-83/ Matl.:-IS-1367(P14)-84 Gr A2-70, STAINLESS STEEL			
3	2	525-56133-3	T-BOLT ASSY		ASSY	
2	1	525-56133-2	PLATE	t1	AISI 304	
1	2	525-56133-1	CLEAT		NYLON6	

ALT.NO.	ECN NO/CHANGES	DATE	BY	CHKD	APPD

PRODUCT: MUMBAI METRO CARS L2 & L7

REF DRG:

MATERIAL:

HEAT TREAT.:

SURFACE TREAT.:

TITLE: CLEAT ASSY, PG21

APPD: VS

REVD:

CHKD: SNH

DRWN: JAGADISH 27.8.19

SCALE: SHEET: OF: Wt.(Kg): 0

BEML LIMITED

DRG No. 525-56133

ALT

A3

GRADE No.	N1	N2	N3	N4	N5	N6	N7	N8	N9	N10	N11	N12
VALUE	0.025	0.05	0.1	0.2	0.4	0.8	1.6	3.2	6.3	12.5	25	50
SYMBOL												

SURFACE ROUGHNESS

COPY RIGHT & CONFIDENTIAL THIS DOCUMENT IS THE EXCLUSIVE PROPERTY OF BEML & CONTAINS CONFIDENTIAL INFORMATION. THIS DOCUMENT OR ITS CONTENTS SHALL NOT BE USED, REPRODUCED OR DISCLOSED IN WHOLE OR IN PART, WITHOUT PRIOR WRITTEN PERMISSION OF BEML. THIS DOCUMENT & ALL ITS COPIES SHALL BE RETURNED TO BEML ON DEMAND DRAWING RELEASED FROM PLM, PHYSICAL SIGNATURE NOT REQUIRED

MACHINING DEVIATIONS FOR LINEAR DIMENSIONS	RANGE	0 - 6	6 - 30	30 - 120	120 - 315	315-1000	1000-2000	2000-4000	ABOVE 4000	RA
	TOLERANCE	±0.1	±0.2	±0.3	±0.5	±0.8	±1.2	±2	±3	~

FOR DIMENSIONAL TOLERANCES OF SHEET METAL PARTS AND WELDED STRUCTURES, REFER STD. RD-227

UNSPECIFIED TOLERANCE FOR LINEAR AND ANGULAR DIMENSIONS REF. IS 2102 (PT-1) (MEDIUM) | QUALITY OF WELD JOINTS REF, RD 230 MEDIUM

VALUES OF SURFACE TEXTURE SHALL BE AS PER COMPANY STD DS. 1012.C.

WELDING SHALL BE CARRIED OUT AS PER IS: 9595-96

STATUS:

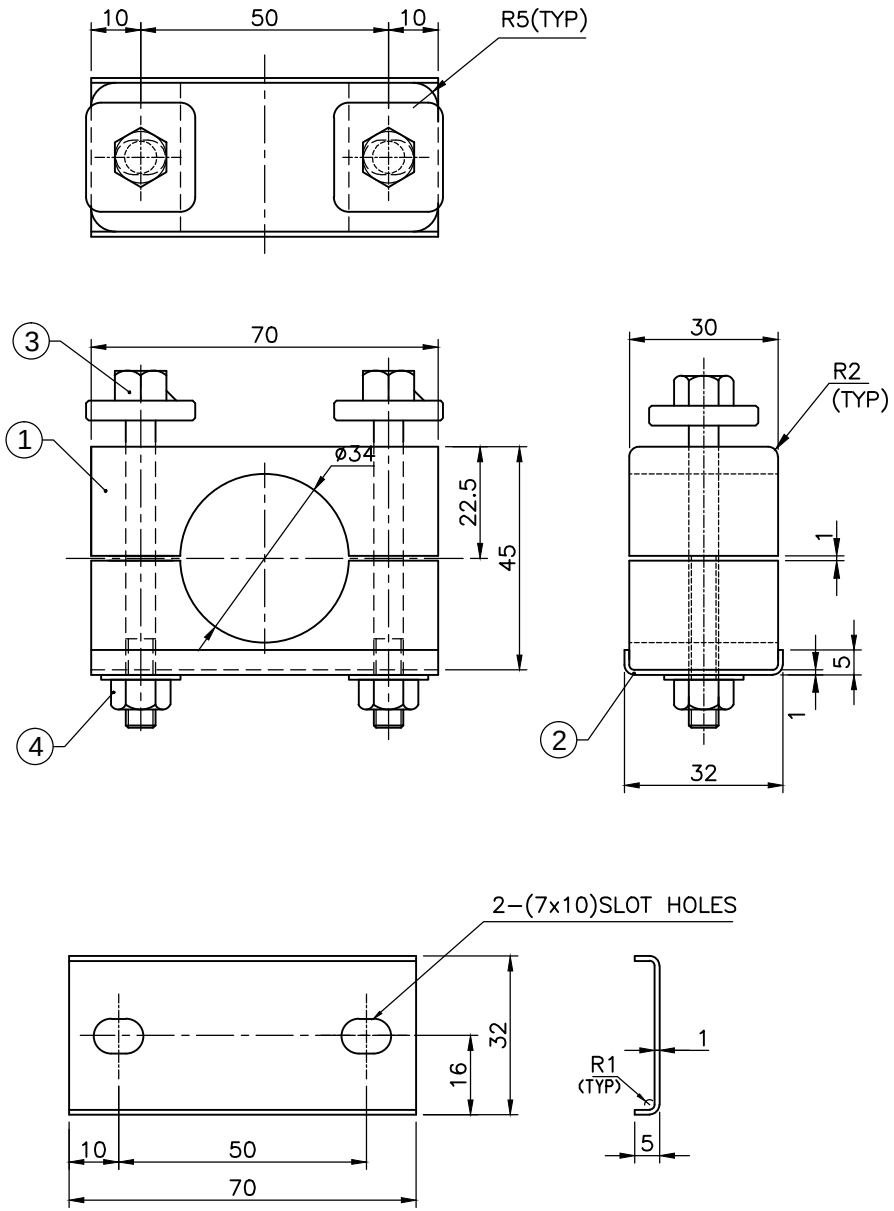

DETAIL-2

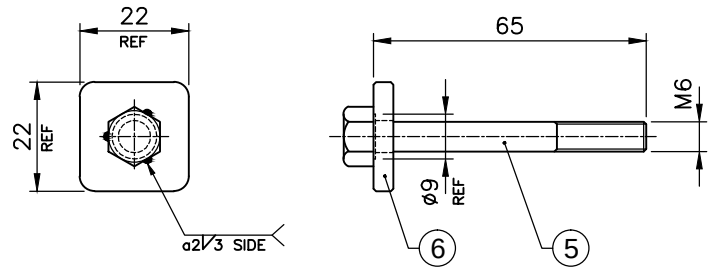

DETAIL-3

NOTE:

1. REMOVE ALL SHARP EDGES
2. FOR CLEATS Min TENSILE STRENGTH: 65 N/mm²
3. BURNING RESISTANCE : SELF EXTINGUISH.
4. ITEM-1 SHALL CONFIRM TO EN45545-HL-3

UNCONTROLLED

SL.No.	QTY	PART / STOCK No.	DESCRIPTION	SIZE	COMPANY STD./I.S	Wt. (Kg)
6	2	555-56360	PAD			
5	2	RFB1420665	HEX.HD.BOLT M6x65 TO IS:1364(Pt-3)-2002/ Matl.:-IS-1367(P14)-84 Gr A2-70, STAINLESS STEEL WITH PRE APPLIED ADHESIVE			
4	2	RFN5540652	HEX. NUT WITH FLANGE M6 TO ISO 7044-83/ Matl.:-IS-1367(P14)-84 Gr A2-70, STAINLESS STEEL			
3	2	525-56134-3	T-BOLT ASSY		ASSY	
2	1	525-56134-2	PLATE	t1	AISI 304	
1	2	525-56134-1	CLEAT		NYLON6	
					MATERIAL	

ALT.NO.	ECN NO/CHANGES	DATE	BY	CHKD	APPD

PRODUCT	MUMBAI METRO CARS L2 & L7		
REF DRG	CP60001-404		
MATERIAL			
HEAT TREAT.		APPD	VS
SURFACE TREAT.		REVD	
TITLE	CLEAT ASSY, PG29	CHKD	SNH
		DRWN	JAGADISH 27.8.19
		SCALE	SHEET / OF / Wt.(Kg) 0
BEML LIMITED		DRG No.	525-56134
		ALT	

A3

GRADE No.	N1	N2	N3	N4	N5	N6	N7	N8	N9	N10	N11	N12
VALUE	0.025	0.05	0.1	0.2	0.4	0.8	1.6	3.2	6.3	12.5	25	50
SYMBOL												

SURFACE ROUGHNESS

COPY RIGHT & CONFIDENTIAL THIS DOCUMENT IS THE EXCLUSIVE PROPERTY OF BEML & CONTAINS CONFIDENTIAL INFORMATION. THIS DOCUMENT OR ITS CONTENTS SHALL NOT BE USED, REPRODUCED OR DISCLOSED IN WHOLE OR IN PART, WITHOUT PRIOR WRITTEN PERMISSION OF BEML. THIS DOCUMENT & ALL ITS COPIES SHALL BE RETURNED TO BEML ON DEMAND DRAWING RELEASED FROM PLM, PHYSICAL SIGNATURE NOT REQUIRED

MACHINING DEVIATIONS FOR LINEAR DIMENSIONS	RANGE	0 - 6	6 - 30	30 - 120	120 - 315	315-1000	1000-2000	2000-4000	ABOVE 4000	RA
	TOLERANCE	±0.1	±0.2	±0.3	±0.5	±0.8	±1.2	±2	±3	~

FOR DIMENSIONAL TOLERANCES OF SHEET METAL PARTS AND WELDED STRUCTURES, REFER STD. RD-227

UNSPECIFIED TOLERANCE FOR LINEAR AND ANGULAR DIMENSIONS REF. IS 2102 (PT-1) (MEDIUM) | QUALITY OF WELD JOINTS REF, RD 230 MEDIUM

VALUES OF SURFACE TEXTURE SHALL BE AS PER COMPANY STD DS. 1012.C.

WELDING SHALL BE CARRIED OUT AS PER IS: 9595-96

STATUS:

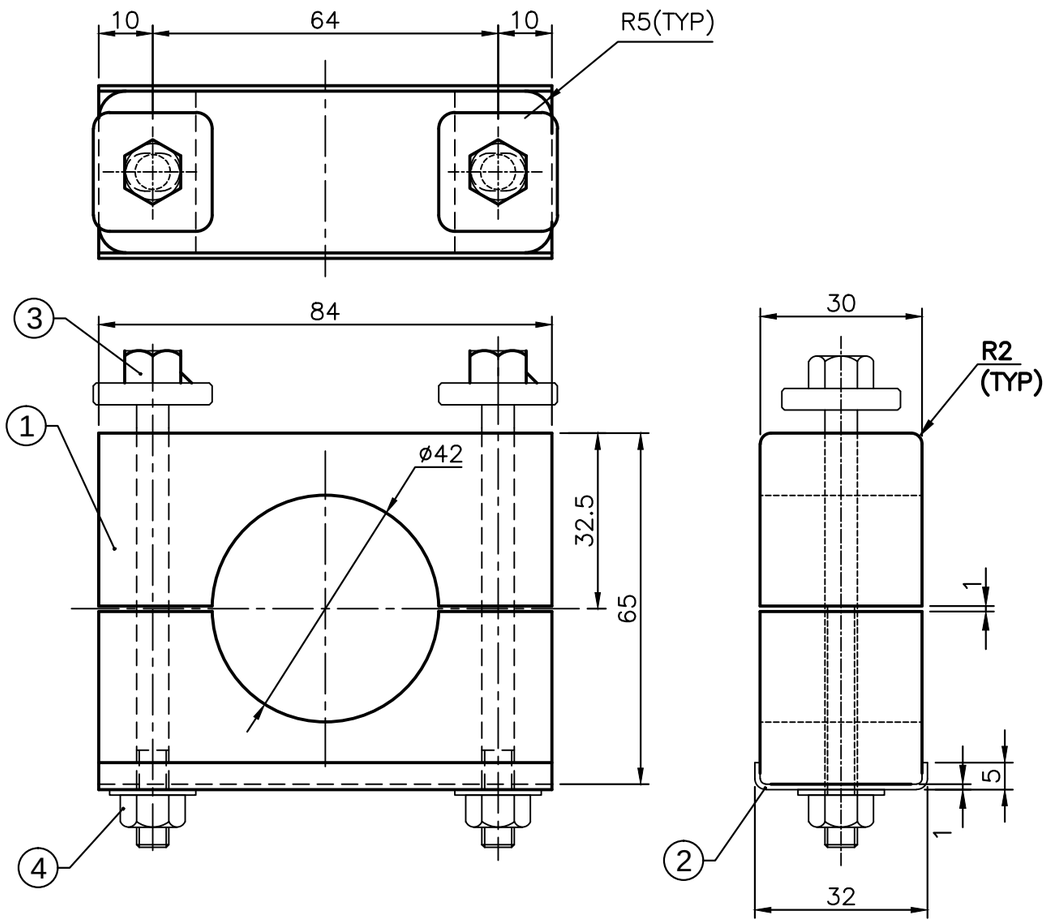

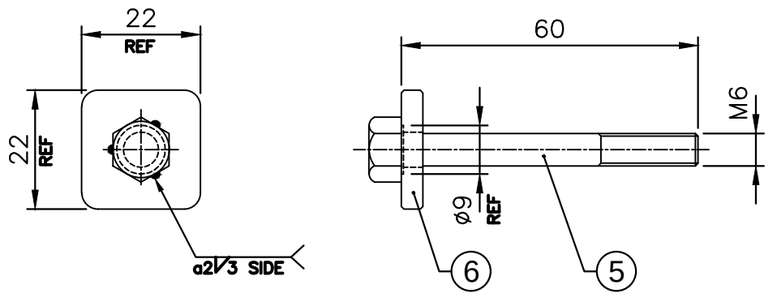

DETAIL-3

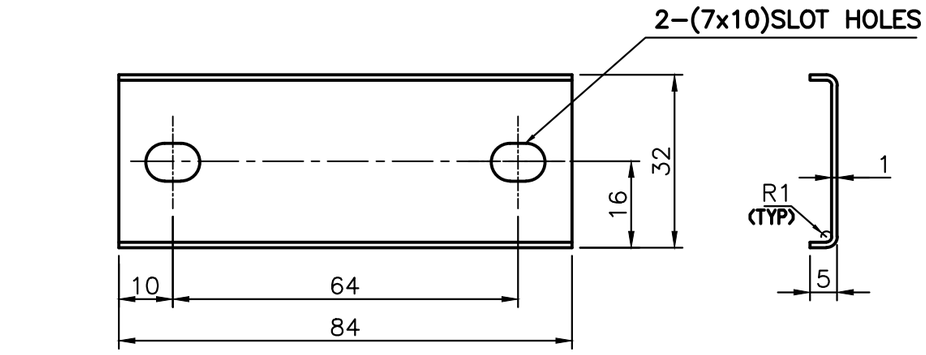

DETAIL-2

NOTE:

1. REMOVE ALL SHARP EDGES
2. FOR CLEATS Min TENSILE STRENGTH: 65 N/mm²
3. BURNING RESISTANCE : SELF EXTINGUISH.
4. ITEM-1 SHALL CONFIRM TO EN45545-HL-3

UNCONTROLLED

SL.No.	QTY	PART / STOCK No.	DESCRIPTION	SIZE	COMPANY STD./I.S	Wt. (Kg)
					MATERIAL	
6	2	555-56360	PAD			
5	2	RFB1420680	HEX.HD.BOLT M6x80 TO IS:1364(Pt-3)-2002/ Matl.:-IS-1367(P14)-84 Gr A2-70, STAINLESS STEEL WITH PRE APPLIED ADHESIVE			
4	2	RFN5540652	HEX. NUT WITH FLANGE M6 TO ISO 7044-83/ Matl.:-IS-1367(P14)-84 Gr A2-70, STAINLESS STEEL			
3	2	525-56135-3	T-BOLT ASSY		ASSY	
2	1	525-56135-2	PLATE	t1	AISI 304	
1	2	525-56135-1	CLEAT		NYLON6	

ALT.NO.	ECN NO/CHANGES	DATE	BY	CHKD	APPD

PRODUCT	MUMBAI METRO CARS L2 & L7		
REF DRG			
MATERIAL			
HEAT TREAT.		APPD	VS
SURFACE TREAT.		REVD	
TITLE	CLEAT ASSY, A TYPE,PG36	CHKD	SNH
		DRWN	JAGADISH 27.8.19
		SCALE	SHEET OF / Wt.(Kg) 0
BEML LIMITED		DRG No.	525-56135
		ALT	

A3

GRADE No.	N1	N2	N3	N4	N5	N6	N7	N8	N9	N10	N11	N12
VALUE	0.025	0.05	0.1	0.2	0.4	0.8	1.6	3.2	6.3	12.5	25	50
SYMBOL												

SURFACE ROUGHNESS

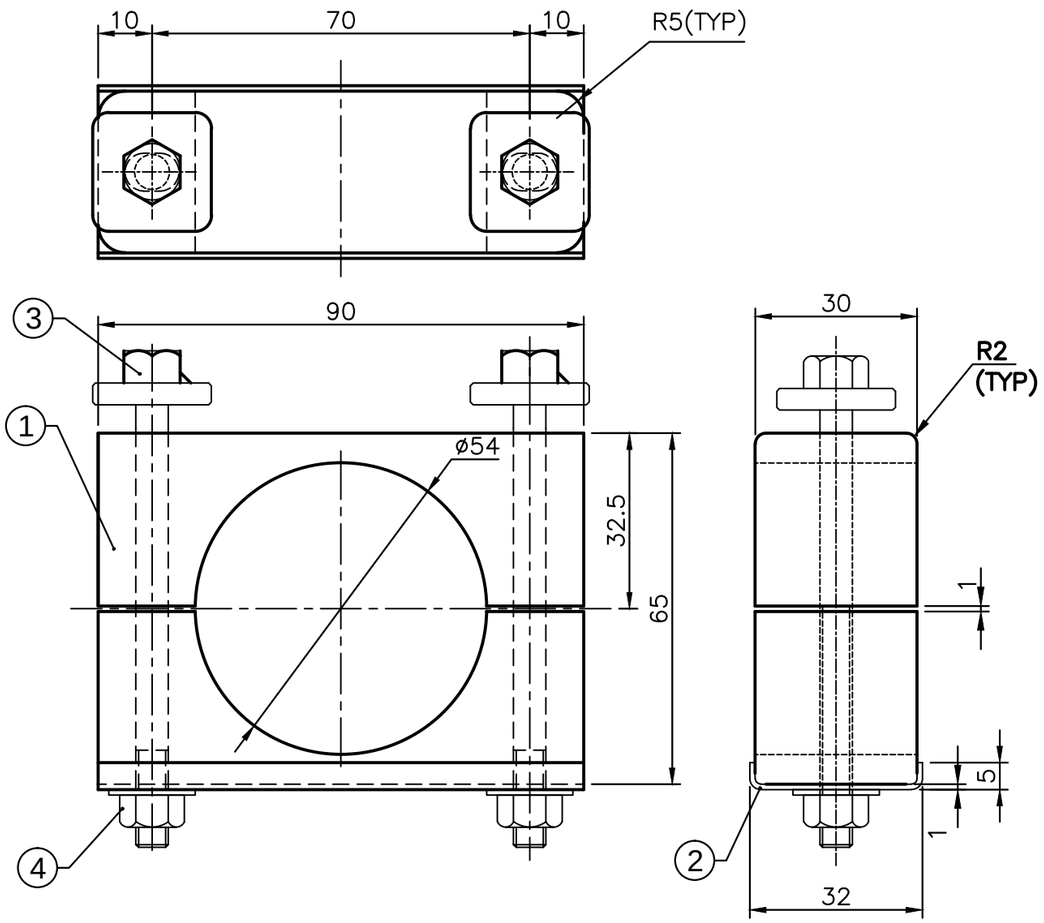

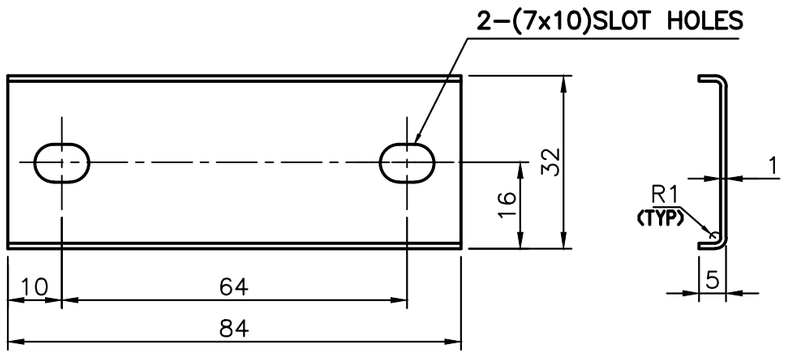

DETAIL-2

MACHINING DEVIATIONS FOR LINEAR DIMENSIONS	RANGE	0 - 6	6 - 30	30 - 120	120 - 315	315-1000	1000-2000	2000-4000	ABOVE 4000	RA
	TOLERANCE	±0.1	±0.2	±0.3	±0.5	±0.8	±1.2	±2	±3	~

FOR DIMENSIONAL TOLERANCES OF SHEET METAL PARTS AND WELDED STRUCTURES, REFER STD. RD-227

UNSPECIFIED TOLERANCE FOR LINEAR AND ANGULAR DIMENSIONS REF. IS 2102 (PT-1) (MEDIUM) | QUALITY OF WELD JOINTS REF, RD 230 MEDIUM

VALUES OF SURFACE TEXTURE SHALL BE AS PER COMPANY STD DS. 1012.C.

WELDING SHALL BE CARRIED OUT AS PER IS: 9595-96

STATUS:

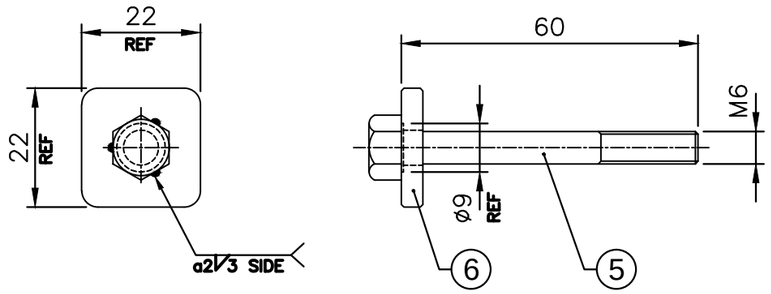

DETAIL-3

NOTE:

1. REMOVE ALL SHARP EDGES
2. FOR CLEATS Min TENSILE STRENGTH: 65 N/mm²
3. BURNING RESISTANCE : SELF EXTINGUISH.
4. ITEM-1 SHALL CONFIRM TO EN45545-HL-3

UNCONTROLLED

SL.No.	QTY	PART / STOCK No.	DESCRIPTION	SIZE	COMPANY STD./I.S	Wt. (Kg)
					MATERIAL	
6	2	555-56360	PAD			
5	2	RFB1420680	HEX.HD.BOLT M6x80 TO IS:1364(Pt-3)-2002/ Matl.:-IS-1367(P14)-84 Gr A2-70, STAINLESS STEEL WITH PRE APPLIED ADHESIVE			
4	2	RFN5540652	HEX. NUT WITH FLANGE M6 TO ISO 7044-83/ Matl.:-IS-1367(P14)-84 Gr A2-70, STAINLESS STEEL			
3	2	525-56136-3	T-BOLT ASSY		ASSY	
2	1	525-56136-2	PLATE	t1	AISI 304	
1	2	525-56136-1	CLEAT		NYLON6	

ALT.NO.	ECN NO/CHANGES	DATE	BY	CHKD	APPD

PRODUCT	MUMBAI METRO CARS L2 & L7		
REF DRG			
MATERIAL			
HEAT TREAT.		APPD	VS
SURFACE TREAT.		REVD	
TITLE	CLEAT ASSY, A TYPE,PG48	CHKD	SNH
		DRWN	JAGADISH 27.8.19
		SCALE	SHEET / OF / Wt.(Kg) 0
	BEML LIMITED	DRG No.	525-56136
		ALT	

A3

COPY RIGHT & CONFIDENTIAL THIS DOCUMENT IS THE EXCLUSIVE PROPERTY OF BEML & CONTAINS CONFIDENTIAL INFORMATION. THIS DOCUMENT OR ITS CONTENTS SHALL NOT BE USED, REPRODUCED OR DISCLOSED IN WHOLE OR IN PART, WITHOUT PRIOR WRITTEN PERMISSION OF BEML. THIS DOCUMENT & ALL ITS COPIES SHALL BE RETURNED TO BEML ON DEMAND DRAWING RELEASED FROM PLM, PHYSICAL SIGNATURE NOT REQUIRED

GRADE No.	N1	N2	N3	N4	N5	N6	N7	N8	N9	N10	N11	N12
VALUE	0.025	0.05	0.1	0.2	0.4	0.8	1.6	3.2	6.3	12.5	25	50
SYMBOL												

SURFACE ROUGHNESS

COPY RIGHT & CONFIDENTIAL THIS DOCUMENT IS THE EXCLUSIVE PROPERTY OF BEML & CONTAINS CONFIDENTIAL INFORMATION. THIS DOCUMENT OR ITS CONTENTS SHALL NOT BE USED, REPRODUCED OR DISCLOSED IN WHOLE OR IN PART, WITHOUT PRIOR WRITTEN PERMISSION OF BEML. THIS DOCUMENT & ALL ITS COPIES SHALL BE RETURNED TO BEML ON DEMAND DRAWING RELEASED FROM PLM, PHYSICAL SIGNATURE NOT REQUIRED

SURFACE ROUGHNESS	N1	N2	N3	N4	N5	N6	N7	N8	N9	N10	N11	N12
VALUE	0.025	0.05	0.1	0.2	0.4	0.8	1.6	3.2	6.3	12.5	25	50
SYMBOL												
GRADE No.												

MACHINING DEVIATIONS FOR LINEAR DIMENSIONS	RANGE	0 - 6	6 - 30	30 - 120	120 - 315	315-1000	1000-2000	2000-4000	ABOVE 4000	RA
	TOLERANCE	±0.1	±0.2	±0.3	±0.5	±0.8	±1.2	±2	±3	~

FOR DIMENSIONAL TOLERANCES OF SHEET METAL PARTS AND WELDED STRUCTURES, REFER STD. RD-227

UNSPECIFIED TOLERANCE FOR LINEAR AND ANGULAR DIMENSIONS REF. IS 2102 (PT-1) (MEDIUM) | QUALITY OF WELD JOINTS REF, RD 230 MEDIUM

VALUES OF SURFACE TEXTURE SHALL BE AS PER COMPANY STD DS. 1012.C.

WELDING SHALL BE CARRIED OUT AS PER IS: 9595-96

STATUS:

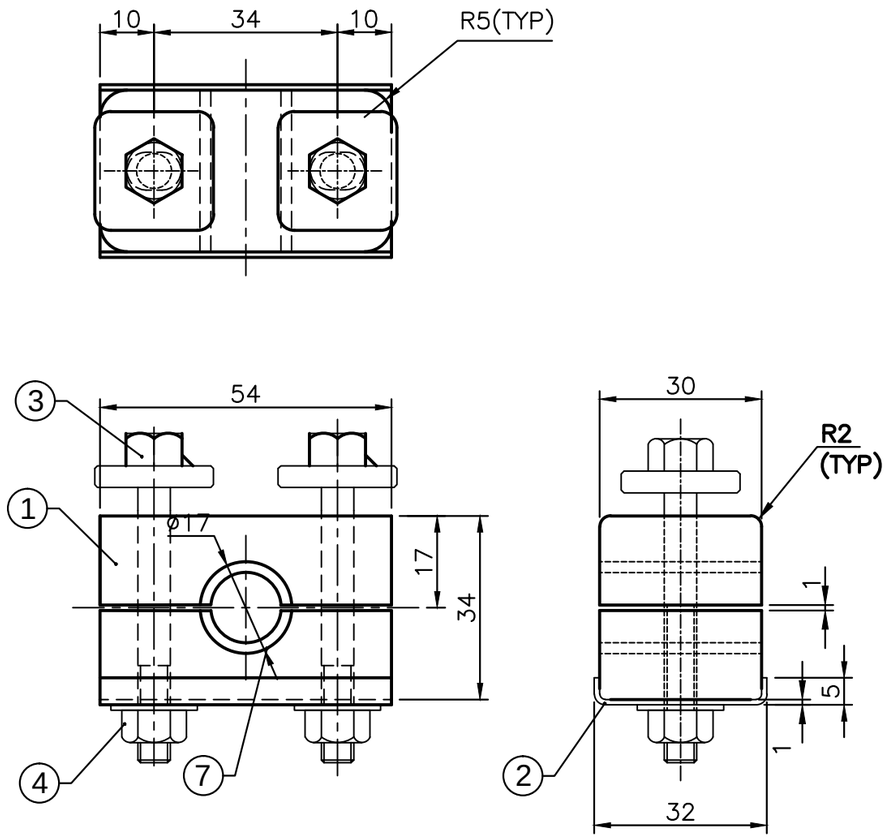

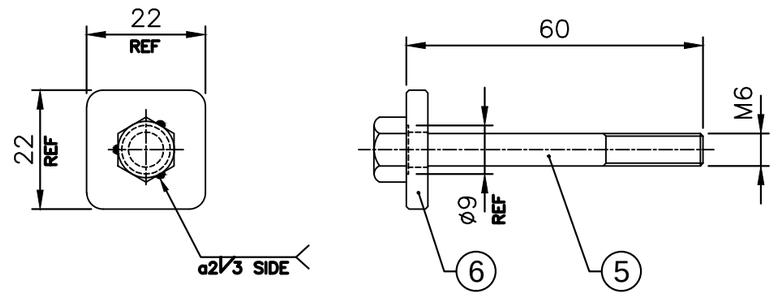

DETAIL-3

NOTE:

1. REMOVE ALL SHARP EDGES
2. FOR CLEATS Min TENSILE STRENGTH: 65 N/mm²
3. BURNING RESISTANCE : SELF EXTINGUISH.
4. ITEM-1&7 SHALL CONFIRM TO EN45545-HL-3

UNCONTROLLED

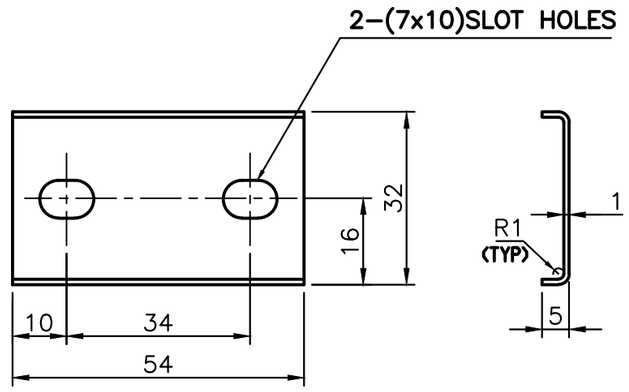

DETAIL-2

SL.No.	QTY	PART / STOCK No.	DESCRIPTION	SIZE	COMPANY STD./I.S	Wt. (Kg)
					MATERIAL	
7	2	525-56137-7	PROTECTIVE RUBBER	t2	EPDM	
6	2	555-56360	PAD			
5	2	RFB1420650	HEX.HD.BOLT M6x50 TO IS:1364(Pt-3)-2002/ Matl.:-IS-1367(P14)-84 Gr A2-70, STAINLESS STEEL WITH PRE APPLIED ADHESIVE			
4	2	RFN5540652	HEX. NUT WITH FLANGE M6 TO ISO 7044-83/ Matl.:-IS-1367(P14)-84 Gr A2-70, STAINLESS STEEL			
3	2	525-56137-3	T-BOLT ASSY		ASSY	
2	1	525-56137-2	PLATE	t1	AISI 304	
1	2	525-56137-1	CLEAT		NYLON6	

ALT.NO.	ECN NO/CHANGES	DATE	BY	CHKD	APPD

PRODUCT	MUMBAI METRO CARS L2 &L7		
REF DRG			
MATERIAL			
HEAT TREAT.		APPD	VS
SURFACE TREAT.		REVD	
TITLE	CLEAT ASSY, A TYPE,SQ50	CHKD	SNH
		DRWN	JAGADISH 27.8.19
		SCALE	SHEET OF / Wt.(Kg) 0
	BEML LIMITED	DRG No.	525-56137
		ALT	

A3

COPY RIGHT & CONFIDENTIAL THIS DOCUMENT IS THE EXCLUSIVE PROPERTY OF BEML & CONTAINS CONFIDENTIAL INFORMATION. THIS DOCUMENT OR ITS CONTENTS SHALL NOT BE USED, REPRODUCED OR DISCLOSED IN WHOLE OR IN PART, WITHOUT PRIOR WRITTEN PERMISSION OF BEML. THIS DOCUMENT & ALL ITS COPIES SHALL BE RETURNED TO BEML ON DEMAND DRAWING RELEASED FROM PLM, PHYSICAL SIGNATURE NOT REQUIRED

MACHINING DEVIATIONS FOR LINEAR DIMENSIONS	RANGE	0 - 6	6 - 30	30 - 120	120 - 315	315-1000	1000-2000	2000-4000	ABOVE 4000	RA
	TOLERANCE	±0.1	±0.2	±0.3	±0.5	±0.8	±1.2	±2	±3	~

FOR DIMENSIONAL TOLERANCES OF SHEET METAL PARTS AND WELDED STRUCTURES, REFER STD. RD-227

UNSPECIFIED TOLERANCE FOR LINEAR AND ANGULAR DIMENSIONS REF. IS 2102 (PT-1) (MEDIUM) | QUALITY OF WELD JOINTS REF, RD 230 MEDIUM

VALUES OF SURFACE TEXTURE SHALL BE AS PER COMPANY STD DS. 1012.C.

WELDING SHALL BE CARRIED OUT AS PER IS: 9595-96

STATUS:

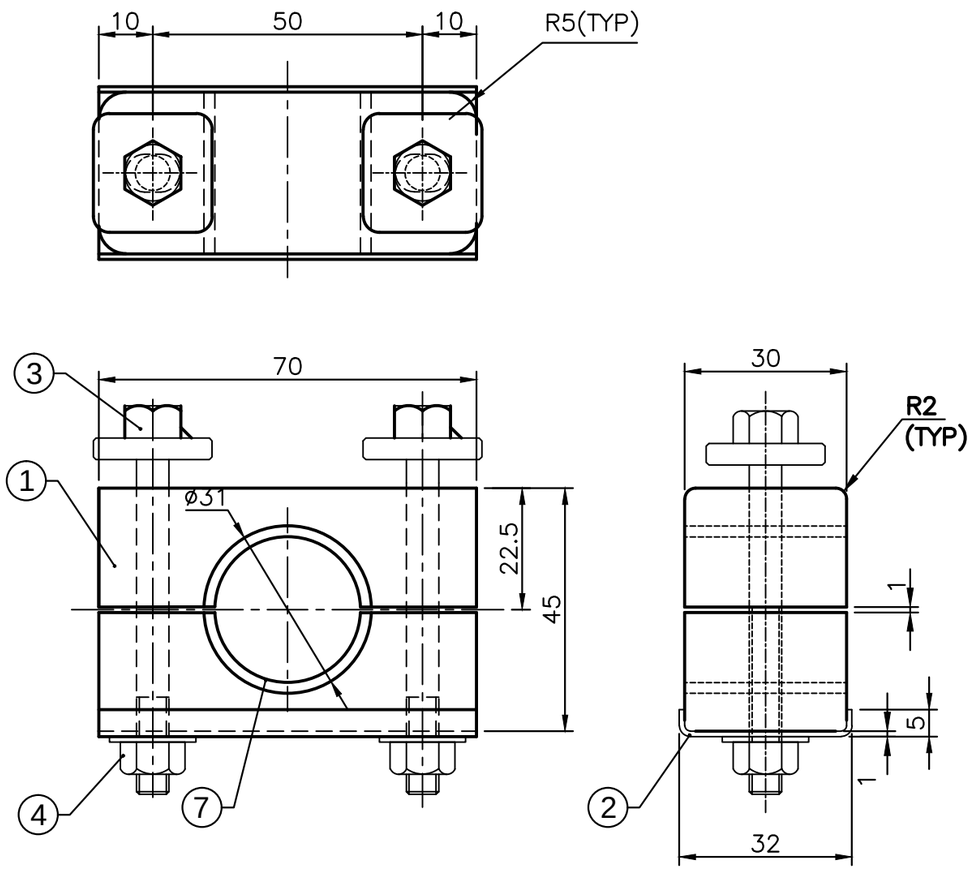

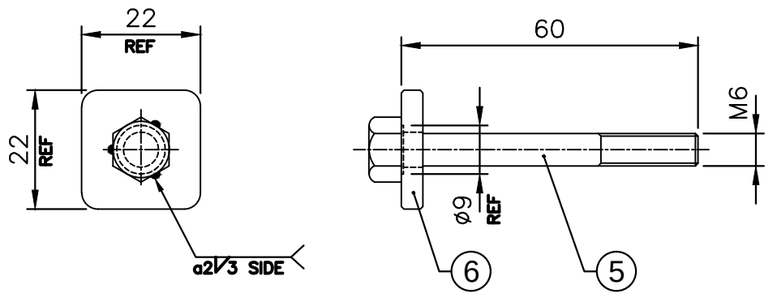

DETAIL-3

NOTE:

1. REMOVE ALL SHARP EDGES
2. FOR CLEATS Min TENSILE STRENGTH: 65 N/mm²
3. BURNING RESISTANCE : SELF EXTINGUISH.
4. ITEM-1&7 SHALL CONFIRM TO EN45545-HL-3

UNCONTROLLED

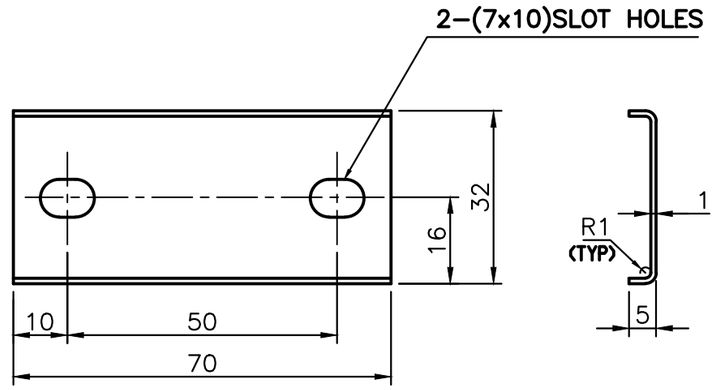

DETAIL-2

SL.No.	QTY	PART / STOCK No.	DESCRIPTION	SIZE	COMPANY STD./I.S	Wt. (Kg)
					MATERIAL	
7	2	525-56138-7	PROTECTIVE RUBBER	t2	EPDM	
6	2	555-56360	PAD			
5	2	RFB1420660	HEX.HD.BOLT M6x60 TO IS:1364(Pt-3)-2002/ Matl.:-IS-1367(P14)-84 Gr A2-70, STAINLESS STEEL WITH PRE APPLIED ADHESIVE			
4	2	RFN5540652	HEX. NUT WITH FLANGE M6 TO ISO 7044-83/ Matl.:-IS-1367(P14)-84 Gr A2-70, STAINLESS STEEL			
3	2	525-56138-3	T-BOLT ASSY		ASSY	
2	1	525-56138-2	PLATE	t1	AISI 304	
1	2	525-56138-1	CLEAT		NYLON6	

ALT.NO.	ECN NO/CHANGES	DATE	BY	CHKD	APPD

PRODUCT	MUMBAI METRO CARS L2&L7		
REF DRG			
MATERIAL			
HEAT TREAT.		APPD	VS
SURFACE TREAT.		REVD	
TITLE	CLEAT ASSY, A TYPE,SQ240	CHKD	SNH
		DRWN	JAGADISH 27.8.19
		SCALE	SHEET OF / Wt.(Kg) 0
	BEML LIMITED	DRG No.	525-56138
		ALT	

A3

GRADE No.	N1	N2	N3	N4	N5	N6	N7	N8	N9	N10	N11	N12
VALUE	0.025	0.05	0.1	0.2	0.4	0.8	1.6	3.2	6.3	12.5	25	50
SYMBOL												

SURFACE ROUGHNESS

COPY RIGHT & CONFIDENTIAL THIS DOCUMENT IS THE EXCLUSIVE PROPERTY OF BEML & CONTAINS CONFIDENTIAL INFORMATION. THIS DOCUMENT OR ITS CONTENTS SHALL NOT BE USED, REPRODUCED OR DISCLOSED IN WHOLE OR IN PART, WITHOUT PRIOR WRITTEN PERMISSION OF BEML. THIS DOCUMENT & ALL ITS COPIES SHALL BE RETURNED TO BEML ON DEMAND DRAWING RELEASED FROM PLM, PHYSICAL SIGNATURE NOT REQUIRED

MACHINING DEVIATIONS FOR LINEAR DIMENSIONS	RANGE	0 - 6	6 - 30	30 - 120	120 - 315	315-1000	1000-2000	2000-4000	ABOVE 4000	RA
	TOLERANCE	±0.1	±0.2	±0.3	±0.5	±0.8	±1.2	±2	±3	~

FOR DIMENSIONAL TOLERANCES OF SHEET METAL PARTS AND WELDED STRUCTURES, REFER STD. RD-227

UNSPECIFIED TOLERANCE FOR LINEAR AND ANGULAR DIMENSIONS REF. IS 2102 (PT-1) (MEDIUM) | QUALITY OF WELD JOINTS REF, RD 230 MEDIUM

VALUES OF SURFACE TEXTURE SHALL BE AS PER COMPANY STD DS. 1012.C.

WELDING SHALL BE CARRIED OUT AS PER IS: 9595-96

STATUS:

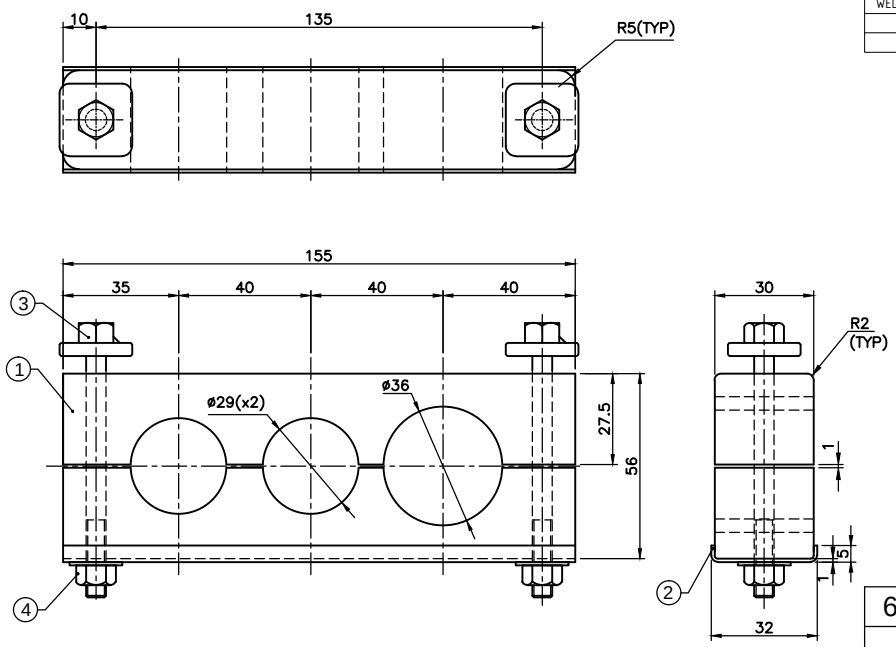

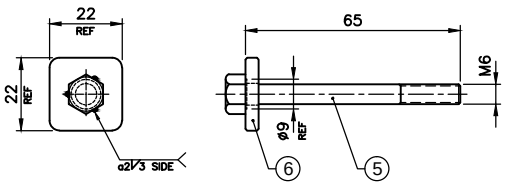

DETAIL-3

UNCONTROLLED

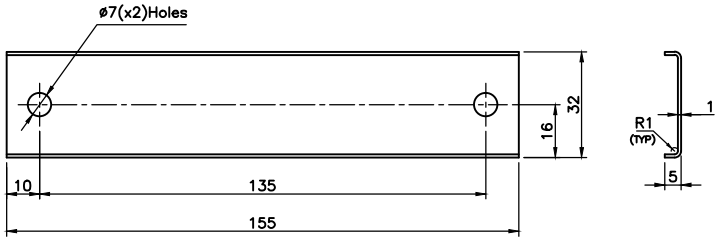

DETAIL-2

SL.No.	QTY	PART / STOCK No.	DESCRIPTION	SIZE	COMPANY STD./I.S	Wt. (Kg)
6	2	555-56360	PAD			
5	2	RFB1420665	HEX.HD.BOLT M6x65 TO IS:1364(Pt-3)-2002/ Matl.:-IS-1367(P14)-84 Gr A2-70, STAINLESS STEEL WITH PRE APPLIED ADHESIVE			
4	2	RFN5540652	HEX. NUT WITH FLANGE M6 TO ISO 7044-83/ Matl.:-IS-1367(P14)-84 Gr A2-70, STAINLESS STEEL			
3	2	525-56139-3	T-BOLT ASSY		ASSY	
2	1	525-56139-2	PLATE	t1	AISI 304	
1	2	525-56139-1	CLEAT		NYLON6	

MATERIAL

NOTE:

1. REMOVE ALL SHARP EDGES
2. FOR CLEATS Min TENSILE STRENGTH: 65 N/mm²
3. BURNING RESISTANCE : SELF EXTINGUISH.
4. ITEM-1 SHALL CONFIRM TO EN45545-HL-3

ALT.NO.	ECN NO/CHANGES	DATE	BY	CHKD	APPD

PRODUCT: MUMBAI METRO CARS L2&L7

REF DRG

MATERIAL

HEAT TREAT. | APPD: VS

SURFACE TREAT. | REVD

TITLE: CLEAT ASSY

CHKD: SNH

DRWN: VISHNU 27.11.19

SCALE | SHEET | OF | Wt.(Kg): 0

BEML LIMITED

DRG No. 525-56139

ALT

A3

GRADE No.	N12	N11	N10	N9	N8	N7	N6	N5	N4	N3	N2	N1
VALUE	50	25	12.5	6.3	3.2	1.6	0.8	0.4	0.2	0.1	0.05	0.025
SYMBOL	~											

SURFACE ROUGHNESS

COPY RIGHT & CONFIDENTIAL THIS DOCUMENT IS THE EXCLUSIVE PROPERTY OF BEML & CONTAINS CONFIDENTIAL INFORMATION. THIS DOCUMENT OR ITS CONTENTS SHALL NOT BE USED, REPRODUCED OR DISCLOSED IN WHOLE OR IN PART, WITHOUT PRIOR WRITTEN PERMISSION OF BEML. THIS DOCUMENT & ALL ITS COPIES SHALL BE RETURNED TO BEML ON DEMAND DRAWING RELEASED FROM PLM, PHYSICAL SIGNATURE NOT REQUIRED

MACHINING DEVIATIONS FOR LINEAR DIMENSIONS	RANGE	0 - 6	6 - 30	30 - 120	120 - 315	315-1000	1000-2000	2000-4000	ABOVE 4000	RA
	TOLERANCE	±0.1	±0.2	±0.3	±0.5	±0.8	±1.2	±2	±3	~

FOR DIMENSIONAL TOLERANCES OF SHEET METAL PARTS AND WELDED STRUCTURES, REFER STD. RD-227

UNSPECIFIED TOLERANCE FOR LINEAR AND ANGULAR DIMENSIONS REF. IS 2102 (PT-1) (MEDIUM) | QUALITY OF WELD JOINTS REF, RD 230 MEDIUM

VALUES OF SURFACE TEXTURE SHALL BE AS PER COMPANY STD DS. 1012.C.

WELDING SHALL BE CARRIED OUT AS PER IS: 9595-96

STATUS:

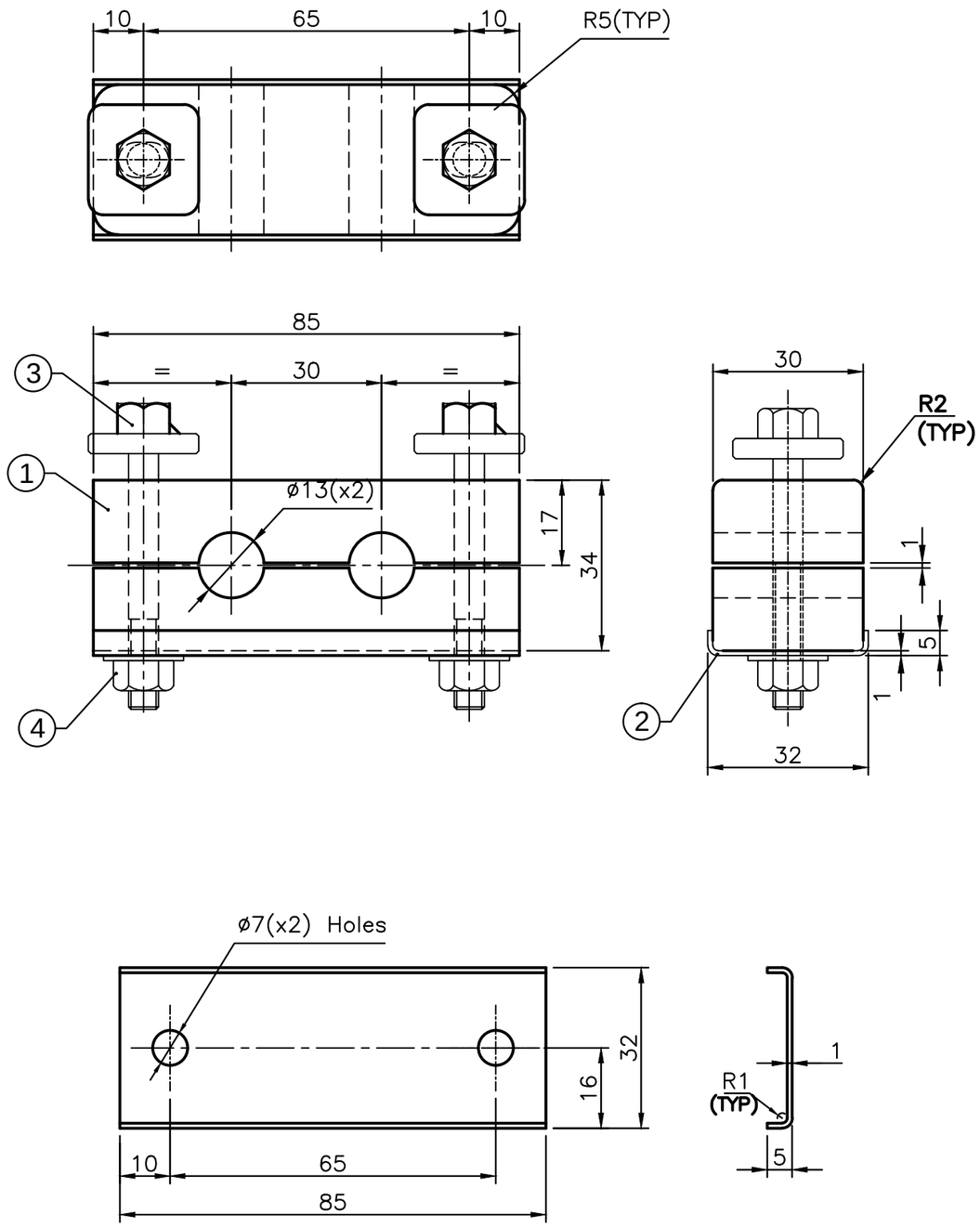

DETAIL-2

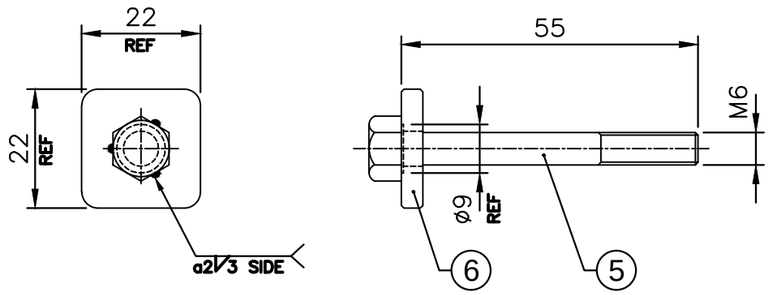

DETAIL-3

NOTE:

1. REMOVE ALL SHARP EDGES
2. FOR CLEATS Min TENSILE STRENGTH: 65 N/mm²
3. BURNING RESISTANCE : SELF EXTINGUISH.
4. ITEM-1 SHALL CONFIRM TO EN45545-HL-3

UNCONTROLLED

SL.No.	QTY	PART / STOCK No.	DESCRIPTION	SIZE	COMPANY STD./I.S	Wt. (Kg)
					MATERIAL	
6	2	555-56360	PAD			
5	2	RFB1420655	HEX.HD.BOLT M6x55 TO IS:1364(Pt-3)-2002/ Matl.:-IS-1367(P14)-84 Gr A2-70, STAINLESS STEEL WITH PRE APPLIED ADHESIVE			
4	2	RFN5540652	HEX. NUT WITH FLANGE M6 TO ISO 7044-83/ Matl.:-IS-1367(P14)-84 Gr A2-70, STAINLESS STEEL			
3	2	525-56140-3	T-BOLT ASSY		ASSY	
2	1	525-56140-2	PLATE	t1	AISI 304	
1	2	525-56140-1	CLEAT		NYLON6	

ALT.NO.	ECN NO/CHANGES	DATE	BY	CHKD	APPD

PRODUCT	MUMBAI METRO CARS L2&L7		
REF DRG			
MATERIAL			
HEAT TREAT.		APPD	VS
SURFACE TREAT.		REVD	
TITLE	CLEAT ASSY, PG9xPG9	CHKD	SNH
		DRWN	JAGADISH 29.8.19
		SCALE	SHEET OF / Wt.(Kg) 0
	BEML LIMITED	DRG No.	525-56140
		ALT	

A3

GRADE No.	N1	N2	N3	N4	N5	N6	N7	N8	N9	N10	N11	N12
VALUE	0.025	0.05	0.1	0.2	0.4	0.8	1.6	3.2	6.3	12.5	25	50
SYMBOL												

SURFACE ROUGHNESS

COPY RIGHT & CONFIDENTIAL THIS DOCUMENT IS THE EXCLUSIVE PROPERTY OF BEML & CONTAINS CONFIDENTIAL INFORMATION. THIS DOCUMENT OR ITS CONTENTS SHALL NOT BE USED, REPRODUCED OR DISCLOSED IN WHOLE OR IN PART, WITHOUT PRIOR WRITTEN PERMISSION OF BEML. THIS DOCUMENT & ALL ITS COPIES SHALL BE RETURNED TO BEML ON DEMAND DRAWING RELEASED FROM PLM, PHYSICAL SIGNATURE NOT REQUIRED

MACHINING DEVIATIONS FOR LINEAR DIMENSIONS	RANGE	0 - 6	6 - 30	30 - 120	120 - 315	315-1000	1000-2000	2000-4000	ABOVE 4000	RA
	TOLERANCE	±0.1	±0.2	±0.3	±0.5	±0.8	±1.2	±2	±3	~

FOR DIMENSIONAL TOLERANCES OF SHEET METAL PARTS AND WELDED STRUCTURES, REFER STD. RD-227

UNSPECIFIED TOLERANCE FOR LINEAR AND ANGULAR DIMENSIONS REF. IS 2102 (PT-1) (MEDIUM) | QUALITY OF WELD JOINTS REF, RD 230 MEDIUM

VALUES OF SURFACE TEXTURE SHALL BE AS PER COMPANY STD DS. 1012.C.

WELDING SHALL BE CARRIED OUT AS PER IS: 9595-96

STATUS:

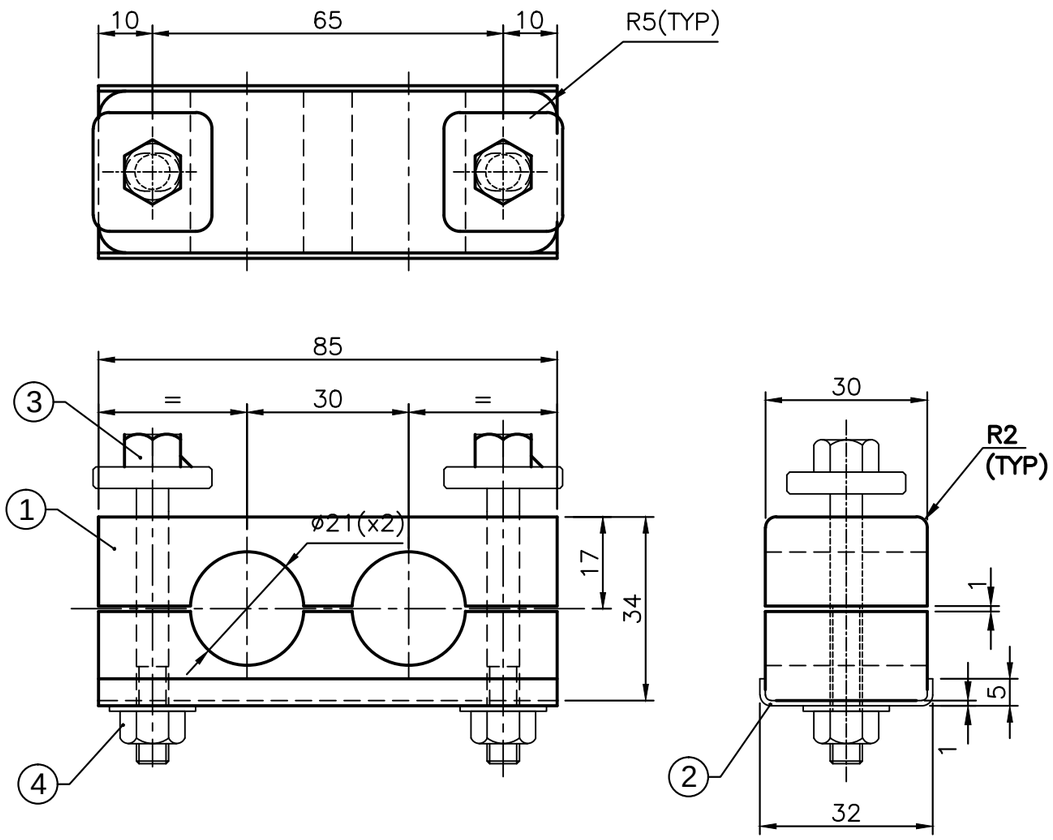

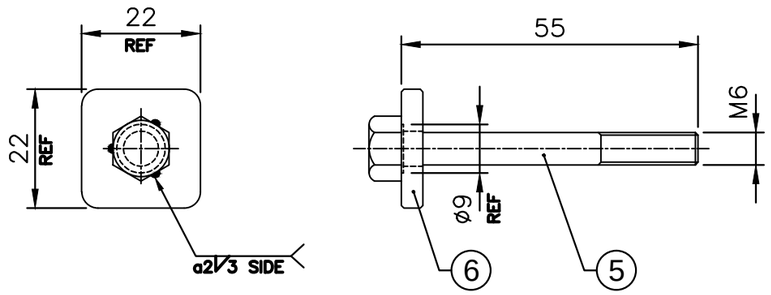

DETAIL-3

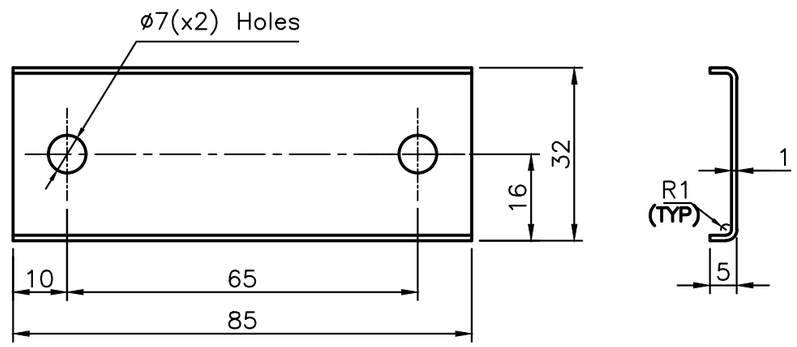

DETAIL-2

NOTE:

1. REMOVE ALL SHARP EDGES
2. FOR CLEATS Min TENSILE STRENGTH: 65 N/mm²
3. BURNING RESISTANCE : SELF EXTINGUISH.
4. ITEM-1 SHALL CONFIRM TO EN45545-HL-3

UNCONTROLLED

SL.No.	QTY	PART / STOCK No.	DESCRIPTION	SIZE	COMPANY STD./I.S	Wt. (Kg)
					MATERIAL	
6	2	555-56360	PAD			
5	2	RFB1420655	HEX.HD.BOLT M6x55 TO IS:1364(Pt-3)-2002/ Matl.:-IS-1367(P14)-84 Gr A2-70, STAINLESS STEEL WITH PRE APPLIED ADHESIVE			
4	2	RFN5540652	HEX. NUT WITH FLANGE M6 TO ISO 7044-83/ Matl.:-IS-1367(P14)-84 Gr A2-70, STAINLESS STEEL			
3	2	525-56141-3	T-BOLT ASSY		ASSY	
2	1	525-56141-2	PLATE	t1	AISI 304	
1	2	525-56141-1	CLEAT		NYLON6	

ALT.NO.	ECN NO/CHANGES	DATE	BY	CHKD	APPD

PRODUCT	MUMBAI METRO CARS L2&L7		
REF DRG			
MATERIAL			
HEAT TREAT.		APPD	VS
SURFACE TREAT.		REVD	
TITLE	CLEAT ASSY, PG16xPG16	CHKD	SNH
		DRWN	JAGADISH 29.8.19
		SCALE	SHEET / OF / Wt.(Kg) 0
	BEML LIMITED	DRG No.	525-56141
		ALT	

A3

GRADE No.	N1	N2	N3	N4	N5	N6	N7	N8	N9	N10	N11	N12
VALUE	0.025	0.05	0.1	0.2	0.4	0.8	1.6	3.2	6.3	12.5	25	50
SYMBOL												

SURFACE ROUGHNESS

COPY RIGHT & CONFIDENTIAL THIS DOCUMENT IS THE EXCLUSIVE PROPERTY OF BEML & CONTAINS CONFIDENTIAL INFORMATION. THIS DOCUMENT OR ITS CONTENTS SHALL NOT BE USED, REPRODUCED OR DISCLOSED IN WHOLE OR IN PART, WITHOUT PRIOR WRITTEN PERMISSION OF BEML. THIS DOCUMENT & ALL ITS COPIES SHALL BE RETURNED TO BEML ON DEMAND DRAWING RELEASED FROM PLM, PHYSICAL SIGNATURE NOT REQUIRED

MACHINING DEVIATIONS FOR LINEAR DIMENSIONS	RANGE	0 - 6	6 - 30	30 - 120	120 - 315	315-1000	1000-2000	2000-4000	ABOVE 4000	RA
	TOLERANCE	±0.1	±0.2	±0.3	±0.5	±0.8	±1.2	±2	±3	~

FOR DIMENSIONAL TOLERANCES OF SHEET METAL PARTS AND WELDED STRUCTURES, REFER STD. RD-227

UNSPECIFIED TOLERANCE FOR LINEAR AND ANGULAR DIMENSIONS REF. IS 2102 (PT-1) (MEDIUM) | QUALITY OF WELD JOINTS REF. RD 230 MEDIUM

VALUES OF SURFACE TEXTURE SHALL BE AS PER COMPANY STD DS. 1012.C.

WELDING SHALL BE CARRIED OUT AS PER IS: 9595-96

STATUS:

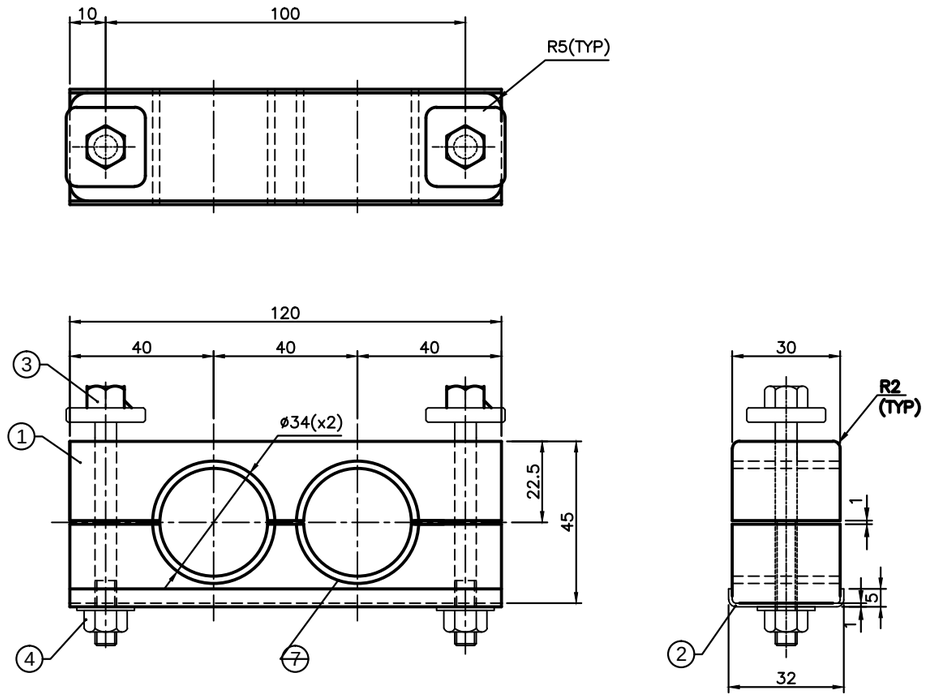

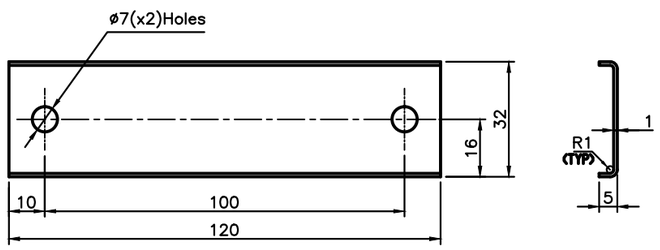

DETAIL-2

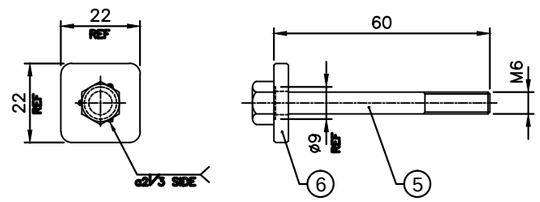

DETAIL-3

NOTE:

1. REMOVE ALL SHARP EDGES
2. FOR CLEATS Min TENSILE STRENGTH: 65 N/mm²
3. BURNING RESISTANCE : SELF EXTINGUISH.
4. ITEM-1&7 SHALL CONFIRM TO EN45545-HL-3

UNCONTROLLED

SL.No.	QTY	PART / STOCK No.	DESCRIPTION	SIZE	COMPANY STD./I.S	Wt. (Kg)
					MATERIAL	
7	4	52-56142-7	PROTECTIVE RUBBER	t2	EPDM	
6	2	52-56142-6	PAD			
5	2	RFB1420660	HEX.HD.BOLT M6x60 TO IS:1364(Pt-3)-2002/ Matl.:-IS-1367(P14)-84 Gr A2-70, STAINLESS STEEL WITH PRE APPLIED ADHESIVE			
4	2	RFN5540652	HEX. NUT WITH FLANGE M6 TO ISO 7044-83/ Matl.:-IS-1367(P14)-84 Gr A2-70, STAINLESS STEEL			
3	2	52-56142-3	T-BOLT ASSY		ASSY	
2	1	52-56142-2	PLATE	t1	AISI 304	
1	2	52-56142-1	CLEAT		NYLON6	

ALT.NO.	ECN NO/CHANGES	DATE	BY	CHKD	APPD

PRODUCT: MUMBAI METRO CARS L2 & L7

REF DRG:

MATERIAL:

HEAT TREAT.:

SURFACE TREAT.:

TITLE: CLEAT ASSY, PG29XPG29

APPD	VS	
REVD		
CHKD	SNH	
DRWN	JAGADISH	29.08.19
SCALE	SHEET	Wt.(Kg)
	OF	0

BEML LIMITED

DRG No. 525-56142

ALT

A3

GRADE No.	N1	N2	N3	N4	N5	N6	N7	N8	N9	N10	N11	N12
VALUE	0.025	0.05	0.1	0.2	0.4	0.8	1.6	3.2	6.3	12.5	25	50
SYMBOL												

SURFACE ROUGHNESS

COPY RIGHT & CONFIDENTIAL THIS DOCUMENT IS THE EXCLUSIVE PROPERTY OF BEML & CONTAINS CONFIDENTIAL INFORMATION. THIS DOCUMENT OR ITS CONTENTS SHALL NOT BE USED, REPRODUCED OR DISCLOSED IN WHOLE OR IN PART, WITHOUT PRIOR WRITTEN PERMISSION OF BEML. THIS DOCUMENT & ALL ITS COPIES SHALL BE RETURNED TO BEML ON DEMAND DRAWING RELEASED FROM PLM, PHYSICAL SIGNATURE NOT REQUIRED

MACHINING DEVIATIONS FOR LINEAR DIMENSIONS	RANGE	0 - 6	6 - 30	30 - 120	120 - 315	315-1000	1000-2000	2000-4000	ABOVE 4000	RA
	TOLERANCE	±0.1	±0.2	±0.3	±0.5	±0.8	±1.2	±2	±3	~

FOR DIMENSIONAL TOLERANCES OF SHEET METAL PARTS AND WELDED STRUCTURES, REFER STD. RD-227

UNSPECIFIED TOLERANCE FOR LINEAR AND ANGULAR DIMENSIONS REF. IS 2102 (PT-1) (MEDIUM) | QUALITY OF WELD JOINTS REF, RD 230 MEDIUM

VALUES OF SURFACE TEXTURE SHALL BE AS PER COMPANY STD DS. 1012.C.

WELDING SHALL BE CARRIED OUT AS PER IS: 9595-96

STATUS:

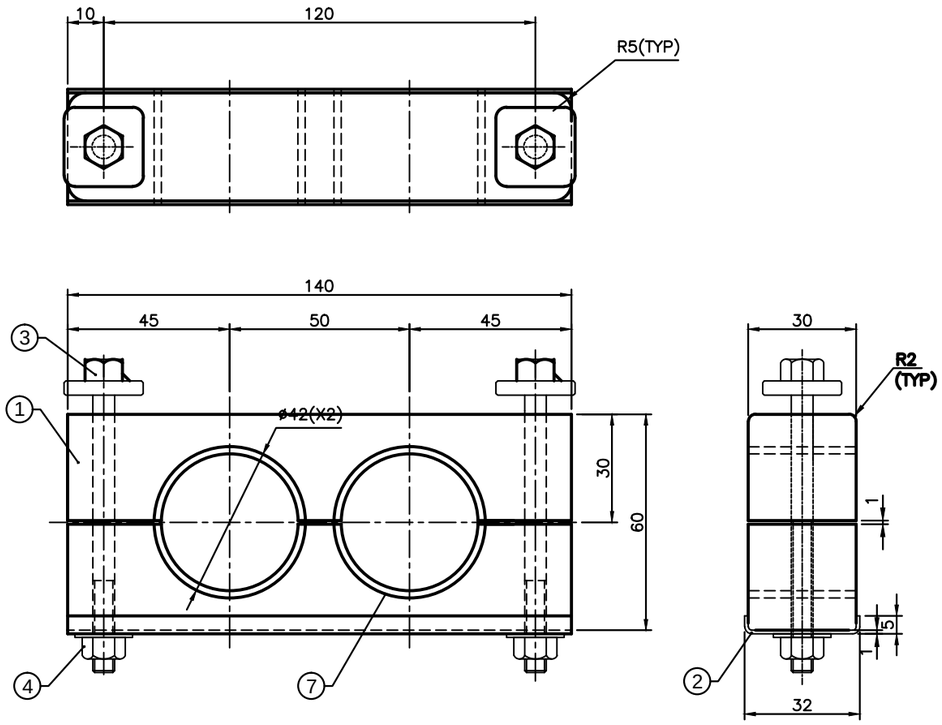

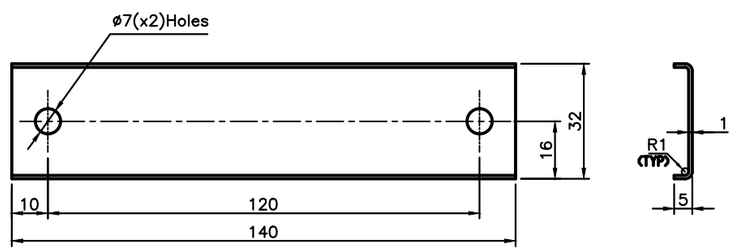

DETAIL-2

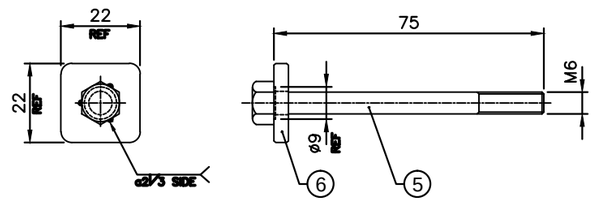

DETAIL-3

UNCONTROLLED

SL.No.	QTY	PART / STOCK No.	DESCRIPTION	SIZE	COMPANY STD./I.S	Wt. (Kg)
					MATERIAL	
7	4	525-56143-7	PROTECTIVE RUBBER	t2	EPDM	
6	2	525-56143-6	PAD			
5	2	RFB1420675	HEX.HD.BOLT M6x75 TO IS:1364(Pt-3)-2002/ Matl.:-IS-1367(P14)-84 Gr A2-70, STAINLESS STEEL WITH PRE APPLIED ADHESIVE			
4	2	RFN5540652	HEX. NUT WITH FLANGE M6 TO ISO 7044-83/ Matl.:-IS-1367(P14)-84 Gr A2-70, STAINLESS STEEL			
3	2	525-56143-3	T-BOLT ASSY		ASSY	
2	1	525-56143-2	PLATE	t1	AISI 304	
1	2	525-56143-1	CLEAT		NYLON6	

ALT.NO.	ECN NO/CHANGES	DATE	BY	CHKD	APPD

PRODUCT	MUMBAI METRO CARS L2 & L7		
REF DRG			
MATERIAL			
HEAT TREAT.		APPD	VS
SURFACE TREAT.		REVD	
TITLE	CLEAT ASSY, PG36XPG36	CHKD	SNH
		DRWN	JAGADISH 29.08.19
		SCALE	SHEET OF / Wt.(Kg) 0
	BEML LIMITED	DRG No.	525-56143
		ALT	

A3

GRADE No.	N1	N2	N3	N4	N5	N6	N7	N8	N9	N10	N11	N12
VALUE	0.025	0.05	0.1	0.2	0.4	0.8	1.6	3.2	6.3	12.5	25	50
SYMBOL												

SURFACE ROUGHNESS

NOTE:

1. REMOVE ALL SHARP EDGES
2. FOR CLEATS Min TENSILE STRENGTH: 65 N/mm²
3. BURNING RESISTANCE : SELF EXTINGUISH.
4. ITEM-1&7 SHALL CONFIRM TO EN45545-HL-3

COPY RIGHT & CONFIDENTIAL THIS DOCUMENT IS THE EXCLUSIVE PROPERTY OF BEML & CONTAINS CONFIDENTIAL INFORMATION. THIS DOCUMENT OR ITS CONTENTS SHALL NOT BE USED, REPRODUCED OR DISCLOSED IN WHOLE OR IN PART, WITHOUT PRIOR WRITTEN PERMISSION OF BEML. THIS DOCUMENT & ALL ITS COPIES SHALL BE RETURNED TO BEML ON DEMAND
DRAWING RELEASED FROM PLM, PHYSICAL SIGNATURE NOT REQUIRED

MACHINING DEVIATIONS FOR LINEAR DIMENSIONS	RANGE	0 - 6	6 - 30	30 - 120	120 - 315	315-1000	1000-2000	2000-4000	ABOVE 4000	RA
	TOLERANCE	±0.1	±0.2	±0.3	±0.5	±0.8	±1.2	±2	±3	~

FOR DIMENSIONAL TOLERANCES OF SHEET METAL PARTS AND WELDED STRUCTURES, REFER STD. RD-227

UNSPECIFIED TOLERANCE FOR LINEAR AND ANGULAR DIMENSIONS REF. IS 2102 (PT-1) (MEDIUM) | QUALITY OF WELD JOINTS REF, RD 230 MEDIUM

VALUES OF SURFACE TEXTURE SHALL BE AS PER COMPANY STD DS. 1012.C.

WELDING SHALL BE CARRIED OUT AS PER IS: 9595-96

STATUS:

UNCONTROLLED

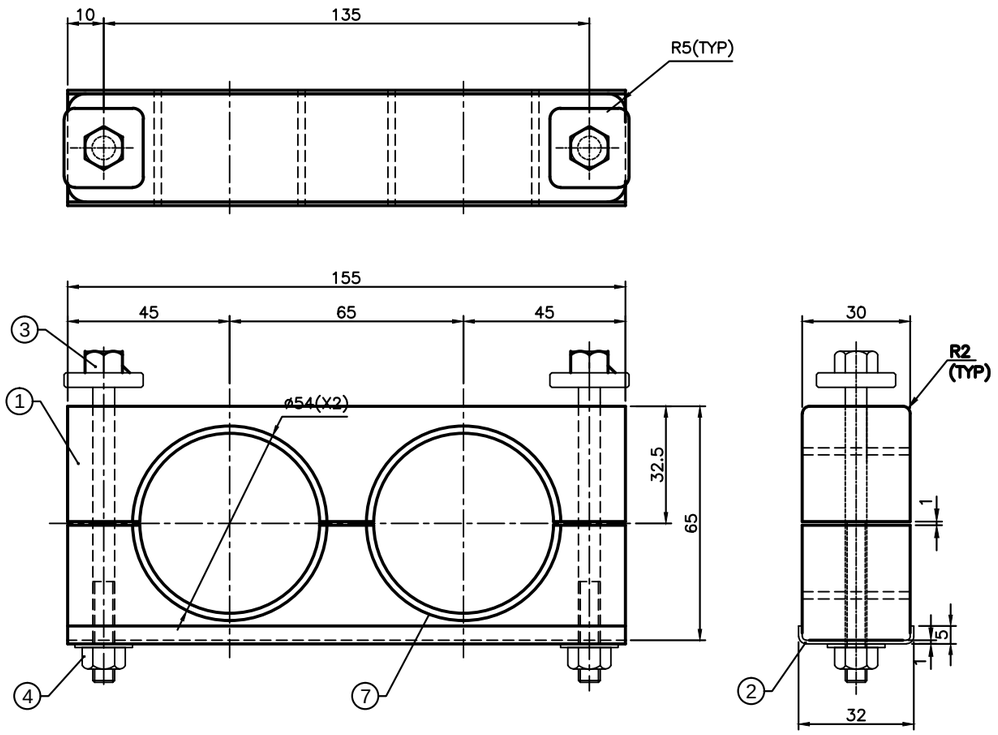

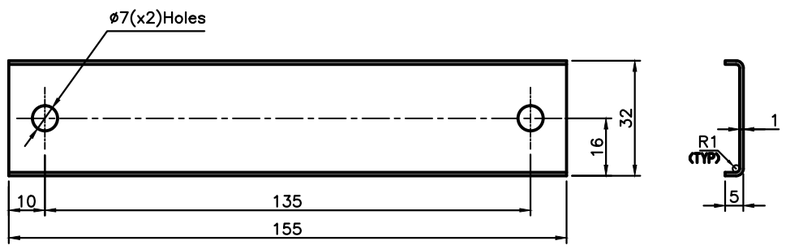

DETAIL-2

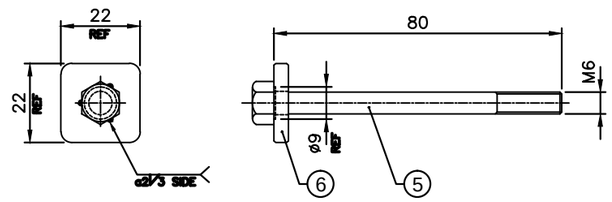

DETAIL-3

NOTE:

1. REMOVE ALL SHARP EDGES
2. FOR CLEATS Min TENSILE STRENGTH: 65 N/mm²
3. BURNING RESISTANCE : SELF EXTINGUISH.
4. ITEM-1&7 SHALL CONFIRM TO EN45545-HL-3

SL.No.	QTY	PART / STOCK No.	DESCRIPTION	SIZE	COMPANY STD./I.S / MATERIAL	Wt. (Kg)
7	4	525-56144-7	PROTECTIVE RUBBER	t2	EPDM	
6	2	525-56144-6	PAD			
5	2	RFB1420680	HEX.HD.BOLT M6x80 TO IS:1364(Pt-3)-2002/ Matl.:-IS-1367(P14)-84 Gr A2-70, STAINLESS STEEL WITH PRE APPLIED ADHESIVE			
4	2	RFN5540652	HEX. NUT WITH FLANGE M6 TO ISO 7044-83/ Matl.:-IS-1367(P14)-84 Gr A2-70, STAINLESS STEEL			
3	2	525-56144-3	T-BOLT ASSY		ASSY	
2	1	525-56144-2	PLATE	t1	AISI 304	
1	2	525-56144-1	CLEAT		NYLON6	

ALT.NO.	ECN NO/CHANGES	DATE	BY	CHKD	APPD

PRODUCT	MUMBAI METRO CARS L2 & L7		
REF DRG			
MATERIAL			
HEAT TREAT.		APPD	VS
SURFACE TREAT.		REVD	
TITLE	CLEAT ASSY, PG48XPG48	CHKD	SNH
		DRWN	JAGADISH 29.08.19
		SCALE	SHEET OF / Wt.(Kg) 0
	BEML LIMITED	DRG No.	525-56144
		ALT	

A3

GRADE No.	N1	N2	N3	N4	N5	N6	N7	N8	N9	N10	N11	N12
VALUE	0.025	0.05	0.1	0.2	0.4	0.8	1.6	3.2	6.3	12.5	25	50
SYMBOL												

SURFACE ROUGHNESS

COPY RIGHT & CONFIDENTIAL THIS DOCUMENT IS THE EXCLUSIVE PROPERTY OF BEML & CONTAINS CONFIDENTIAL INFORMATION. THIS DOCUMENT OR ITS CONTENTS SHALL NOT BE USED, REPRODUCED OR DISCLOSED IN WHOLE OR IN PART, WITHOUT PRIOR WRITTEN PERMISSION OF BEML. THIS DOCUMENT & ALL ITS COPIES SHALL BE RETURNED TO BEML ON DEMAND DRAWING RELEASED FROM PLM, PHYSICAL SIGNATURE NOT REQUIRED

GRADE No.	N1	N2	N3	N4	N5	N6	N7	N8	N9	N10	N11	N12
VALUE	0.025	0.05	0.1	0.2	0.4	0.8	1.6	3.2	6.3	12.5	25	50
SYMBOL												

SURFACE ROUGHNESS

MACHINING DEVIATIONS FOR LINEAR DIMENSIONS	RANGE	0 - 6	6 - 30	30 - 120	120 - 315	315-1000	1000-2000	2000-4000	ABOVE 4000	RA
	TOLERANCE	±0.1	±0.2	±0.3	±0.5	±0.8	±1.2	±2	±3	~

FOR DIMENSIONAL TOLERANCES OF SHEET METAL PARTS AND WELDED STRUCTURES, REFER STD. RD-227

UNSPECIFIED TOLERANCE FOR LINEAR AND ANGULAR DIMENSIONS REF. IS 2102 (PT-1) (MEDIUM) | QUALITY OF WELD JOINTS REF, RD 230 MEDIUM

VALUES OF SURFACE TEXTURE SHALL BE AS PER COMPANY STD DS. 1012.C.

WELDING SHALL BE CARRIED OUT AS PER IS: 9595-96

STATUS:

UNCONTROLLED

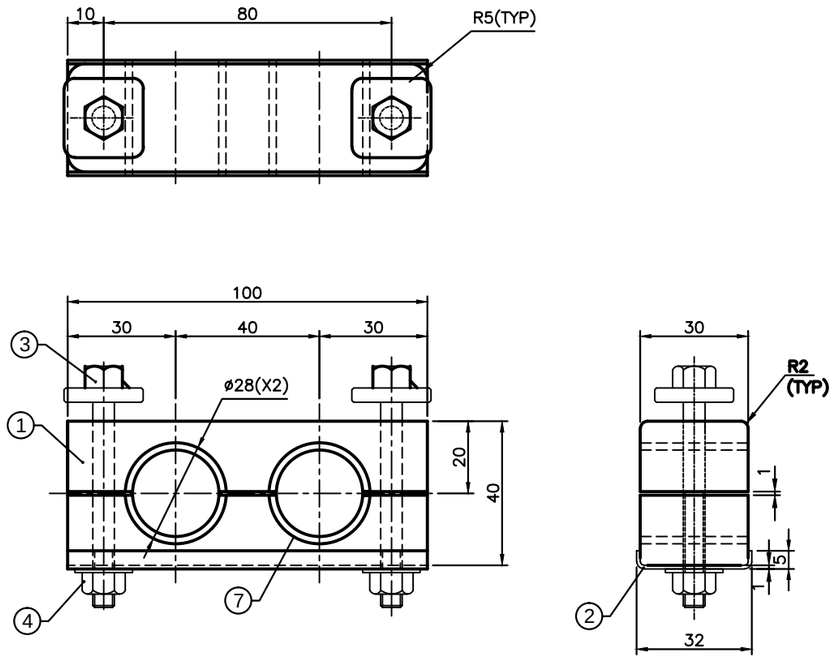

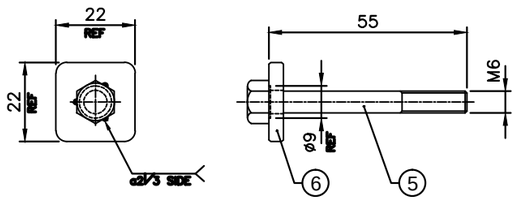

DETAIL-3

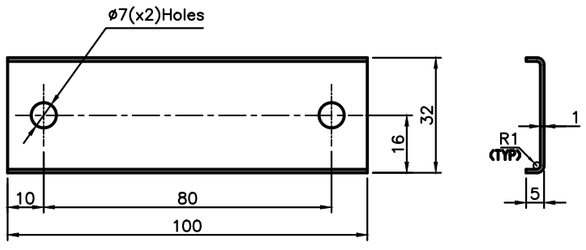

DETAIL-2

NOTE:

1. REMOVE ALL SHARP EDGES
2. FOR CLEATS Min TENSILE STRENGTH: 65 N/mm²
3. BURNING RESISTANCE : SELF EXTINGUISH.
4. ITEM-1&7 SHALL CONFIRM TO EN45545-HL-3

SL.No.	QTY	PART / STOCK No.	DESCRIPTION	SIZE	COMPANY STD./I.S / MATERIAL	Wt. (Kg)
7	4	525-56145-7	PROTECTIVE RUBBER	t2	EPDM	
6	2	525-56145-6	PAD			
5	2	RFB1420655	HEX.HD.BOLT M6x55 TO IS:1364(Pt-3)-2002/ Matl.:-IS-1367(P14)-84 Gr A2-70, STAINLESS STEEL WITH PRE APPLIED ADHESIVE			
4	2	RFN5540652	HEX. NUT WITH FLANGE M6 TO ISO 7044-83/ Matl.:-IS-1367(P14)-84 Gr A2-70, STAINLESS STEEL			
3	2	525-56145-3	T-BOLT ASSY		ASSY	
2	1	525-56145-2	PLATE	t1	AISI 304	
1	2	525-56145-1	CLEAT		NYLON6	

ALT.NO.	ECN NO/CHANGES	DATE	BY	CHKD	APPD

PRODUCT	MUMBAI METRO CARS L2 & L7		
REF DRG			
MATERIAL			
HEAT TREAT.		APPD	VS
SURFACE TREAT.		REVD	
TITLE	CLEAT ASSY, PG21XPG21	CHKD	SNH
		DRWN	JAGADISH 29.08.19
		SCALE	SHEET / OF / Wt.(Kg) 0
	BEML LIMITED	DRG No.	525-56145
		ALT	

A3

COPY RIGHT & CONFIDENTIAL THIS DOCUMENT IS THE EXCLUSIVE PROPERTY OF BEML & CONTAINS CONFIDENTIAL INFORMATION. THIS DOCUMENT OR ITS CONTENTS SHALL NOT BE USED, REPRODUCED OR DISCLOSED IN WHOLE OR IN PART, WITHOUT PRIOR WRITTEN PERMISSION OF BEML. THIS DOCUMENT & ALL ITS COPIES SHALL BE RETURNED TO BEML ON DEMAND DRAWING RELEASED FROM PLM, PHYSICAL SIGNATURE NOT REQUIRED

MACHINING DEVIATIONS FOR LINEAR DIMENSIONS	RANGE	0 - 6	6 - 30	30 - 120	120 - 315	315-1000	1000-2000	2000-4000	ABOVE 4000	RA
	TOLERANCE	±0.1	±0.2	±0.3	±0.5	±0.8	±1.2	±2	±3	~

FOR DIMENSIONAL TOLERANCES OF SHEET METAL PARTS AND WELDED STRUCTURES, REFER STD. RD-227

UNSPECIFIED TOLERANCE FOR LINEAR AND ANGULAR DIMENSIONS REF. IS 2102 (PT-1) (MEDIUM) | QUALITY OF WELD JOINTS REF. RD 230 MEDIUM

VALUES OF SURFACE TEXTURE SHALL BE AS PER COMPANY STD DS. 1012.C.

WELDING SHALL BE CARRIED OUT AS PER IS: 9595-96

STATUS:

UNCONTROLLED

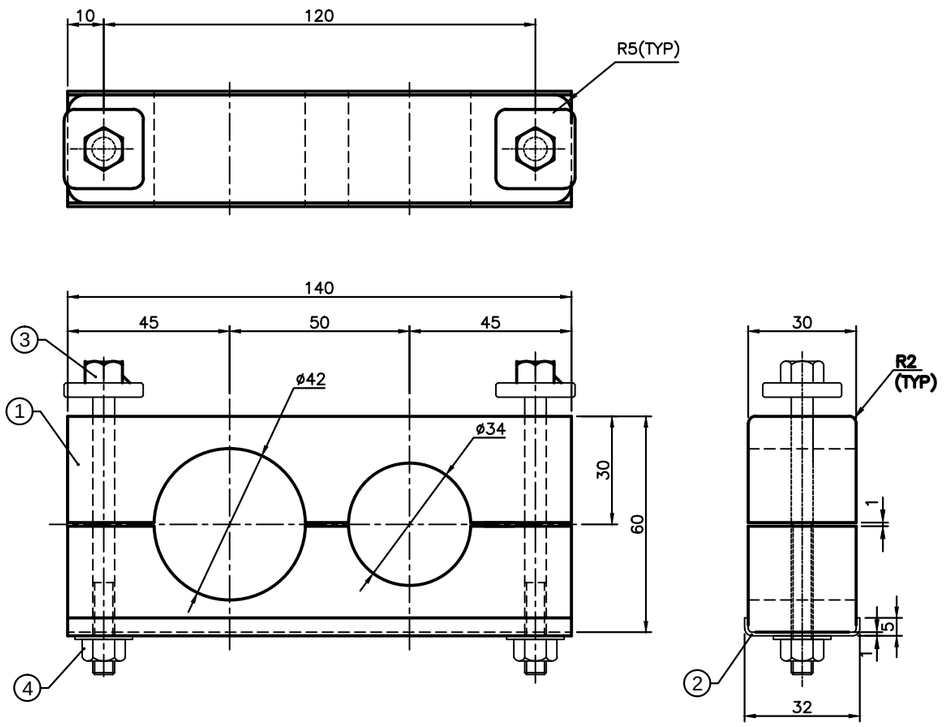

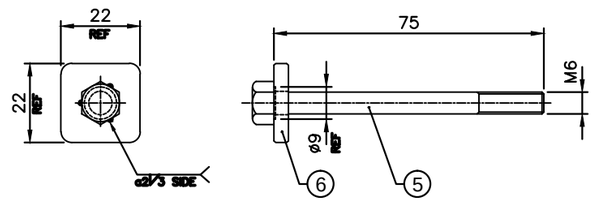

DETAIL-3

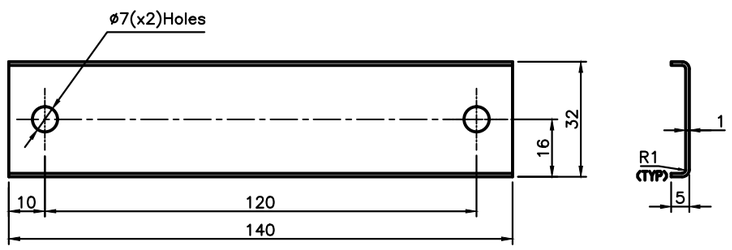

DETAIL-2

NOTE:

1. REMOVE ALL SHARP EDGES
2. FOR CLEATS Min TENSILE STRENGTH: 65 N/mm²
3. BURNING RESISTANCE : SELF EXTINGUISH.
4. ITEM-1 SHALL CONFIRM TO EN45545-HL-3

SL.No.	QTY	PART / STOCK No.	DESCRIPTION	SIZE	COMPANY STD./I.S / MATERIAL	Wt. (Kg)
6	2	555-56360	PAD			
5	2	RFB1420675	HEX.HD.BOLT M6x75 TO IS:1364(Pt-3)-2002/ Matl.:-IS-1367(P14)-84 Gr A2-70, STAINLESS STEEL WITH PRE APPLIED ADHESIVE			
4	2	RFN5540652	HEX. NUT WITH FLANGE M6 TO ISO 7044-83/ Matl.:-IS-1367(P14)-84 Gr A2-70, STAINLESS STEEL			
3	2	525-56146-3	T-BOLT ASSY		ASSY	
2	1	525-56146-2	PLATE	t1	AISI 304	
1	2	525-56146-1	CLEAT		NYLON6	

ALT.NO.	ECN NO/CHANGES	DATE	BY	CHKD	APPD

PRODUCT: MUMBAI METRO CARS L2 & L7

REF DRG:

MATERIAL:

HEAT TREAT.:

SURFACE TREAT.:

TITLE: CLEAT ASSY, D42x34

APPD: VS

REVD:

CHKD: SNH

DRWN: JAGADISH 29.08.19

SCALE: SHEET: OF: Wt.(Kg): 0

BEML LIMITED

DRG No. 525-56146

ALT

A3

GRADE No.	N1	N2	N3	N4	N5	N6	N7	N8	N9	N10	N11	N12
VALUE	0.025	0.05	0.1	0.2	0.4	0.8	1.6	3.2	6.3	12.5	25	50
SYMBOL												

SURFACE ROUGHNESS

MACHINING DEVIATIONS FOR LINEAR DIMENSIONS	RANGE	0 - 6	6 - 30	30 - 120	120 - 315	315-1000	1000-2000	2000-4000	ABOVE 4000	RA
	TOLERANCE	±0.1	±0.2	±0.3	±0.5	±0.8	±1.2	±2	±3	~

FOR DIMENSIONAL TOLERANCES OF SHEET METAL PARTS AND WELDED STRUCTURES, REFER STD. RD-227

UNSPECIFIED TOLERANCE FOR LINEAR AND ANGULAR DIMENSIONS REF. IS 2102 (PT-1) (MEDIUM) | QUALITY OF WELD JOINTS REF. RD 230 MEDIUM

VALUES OF SURFACE TEXTURE SHALL BE AS PER COMPANY STD DS. 1012.C.

WELDING SHALL BE CARRIED OUT AS PER IS: 9595-96

STATUS:

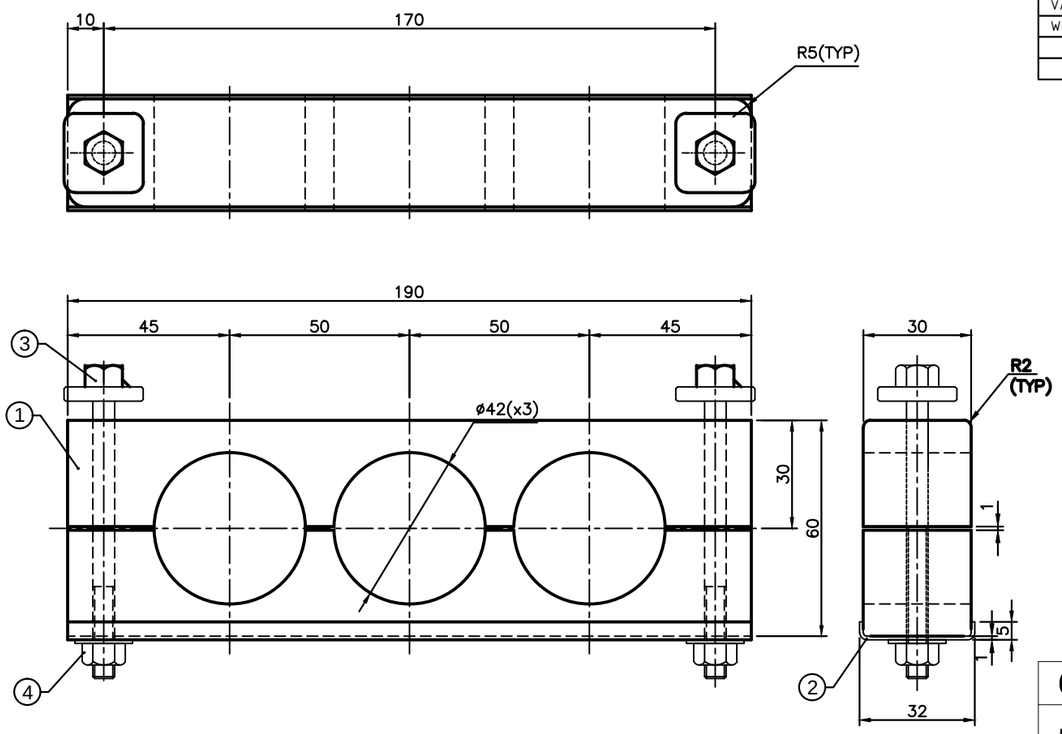

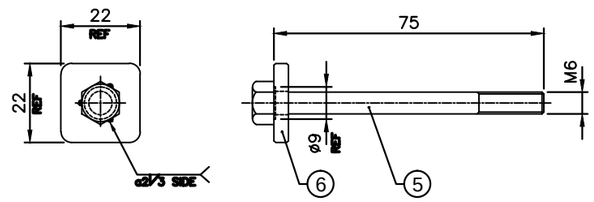

DETAIL-3

UNCONTROLLED

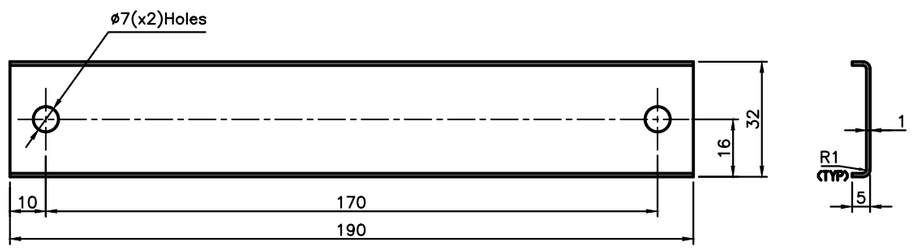

DETAIL-2

NOTE:

1. REMOVE ALL SHARP EDGES
2. FOR CLEATS Min TENSILE STRENGTH: 65 N/mm²
3. BURNING RESISTANCE : SELF EXTINGUISH.
4. ITEM-1 SHALL CONFIRM TO EN45545-HL-3

SL.No.	QTY	PART / STOCK No.	DESCRIPTION	SIZE	COMPANY STD./I.S	Wt. (Kg)
					MATERIAL	
6	2	555-56360	PAD			
5	2	RFB1420675	HEX.HD.BOLT M6x75 TO IS:1364(Pt-3)-2002/ Matl.:-IS-1367(P14)-84 Gr A2-70, STAINLESS STEEL WITH PRE APPLIED ADHESIVE			
4	2	RFN5540652	HEX. NUT WITH FLANGE M6 TO ISO 7044-83/ Matl.:-IS-1367(P14)-84 Gr A2-70, STAINLESS STEEL			
3	2	525-56147-1	T-BOLT ASSY		ASSY	
2	1	525-56147-1	PLATE	t1	AISI 304	
1	2	525-56147-1	CLEAT		NYLON6	

ALT.NO.	ECN NO/CHANGES	DATE	BY	CHKD	APPD

PRODUCT: MUMBAI METRO CARS L2 & L7

REF DRG:

MATERIAL:

HEAT TREAT.:

SURFACE TREAT.:

TITLE: CLEAT ASSY, D42x3

APPD	VS	
REVD		
CHKD	SNH	
DRWN	JAGADISH	29.08.19
SCALE	SHEET / OF	Wt.(Kg) 0

BEML LIMITED

DRG No. 525-56147

ALT

A3

COPY RIGHT & CONFIDENTIAL THIS DOCUMENT IS THE EXCLUSIVE PROPERTY OF BEML & CONTAINS CONFIDENTIAL INFORMATION. THIS DOCUMENT OR ITS CONTENTS SHALL NOT BE USED, REPRODUCED OR DISCLOSED IN WHOLE OR IN PART, WITHOUT PRIOR WRITTEN PERMISSION OF BEML. THIS DOCUMENT & ALL ITS COPIES SHALL BE RETURNED TO BEML ON DEMAND DRAWING RELEASED FROM PLM, PHYSICAL SIGNATURE NOT REQUIRED

GRADE No.	N1	N2	N3	N4	N5	N6	N7	N8	N9	N10	N11	N12
VALUE	0.025	0.05	0.1	0.2	0.4	0.8	1.6	3.2	6.3	12.5	25	50
SYMBOL												

SURFACE ROUGHNESS

COPY RIGHT & CONFIDENTIAL THIS DOCUMENT IS THE EXCLUSIVE PROPERTY OF BEML & CONTAINS CONFIDENTIAL INFORMATION. THIS DOCUMENT OR ITS CONTENTS SHALL NOT BE USED, REPRODUCED OR DISCLOSED IN WHOLE OR IN PART, WITHOUT PRIOR WRITTEN PERMISSION OF BEML. THIS DOCUMENT & ALL ITS COPIES SHALL BE RETURNED TO BEML ON DEMAND DRAWING RELEASED FROM PLM, PHYSICAL SIGNATURE NOT REQUIRED

MACHINING DEVIATIONS FOR LINEAR DIMENSIONS	RANGE	0 - 6	6 - 30	30 - 120	120 - 315	315-1000	1000-2000	2000-4000	ABOVE 4000	RA
	TOLERANCE	±0.1	±0.2	±0.3	±0.5	±0.8	±1.2	±2	±3	~

FOR DIMENSIONAL TOLERANCES OF SHEET METAL PARTS AND WELDED STRUCTURES, REFER STD. RD-227

UNSPECIFIED TOLERANCE FOR LINEAR AND ANGULAR DIMENSIONS REF. IS 2102 (PT-1) (MEDIUM) | QUALITY OF WELD JOINTS REF. RD 230 MEDIUM

VALUES OF SURFACE TEXTURE SHALL BE AS PER COMPANY STD DS. 1012.C.

WELDING SHALL BE CARRIED OUT AS PER IS: 9595-96

STATUS:

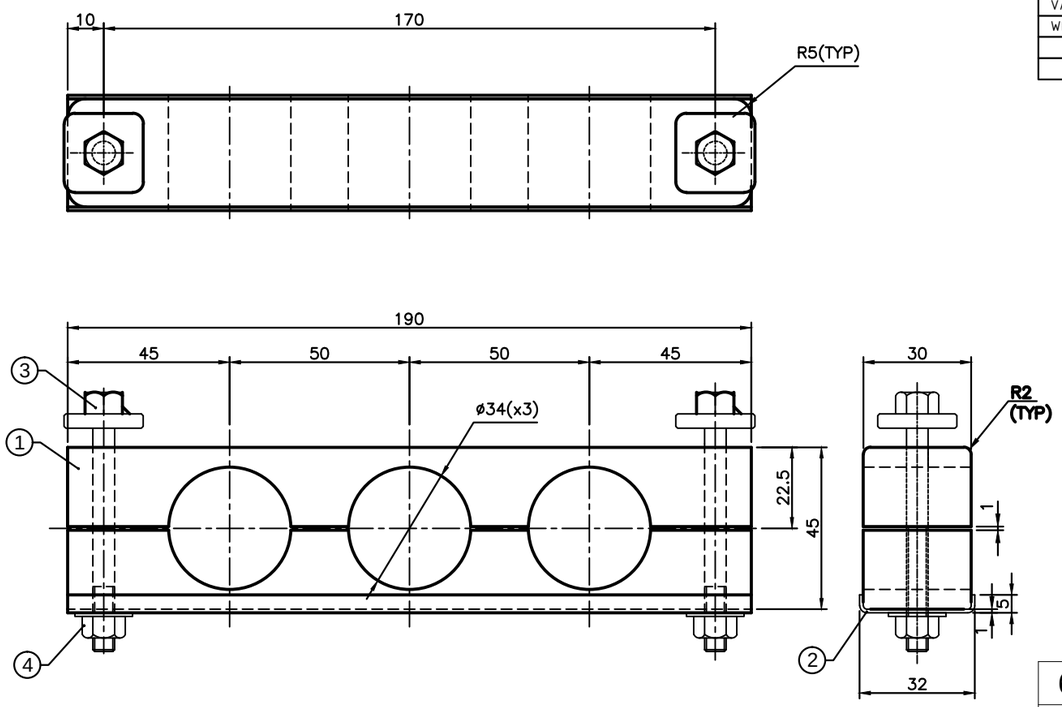

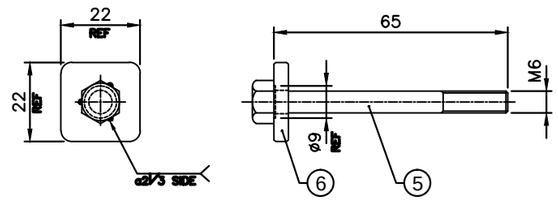

DETAIL-3

UNCONTROLLED

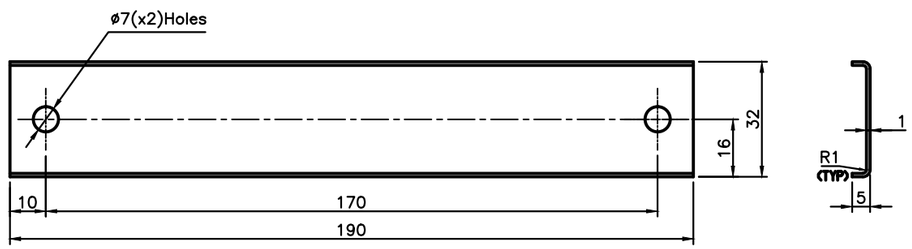

DETAIL-2

NOTE:

1. REMOVE ALL SHARP EDGES
2. FOR CLEATS Min TENSILE STRENGTH: 65 N/mm²
3. BURNING RESISTANCE : SELF EXTINGUISH.
4. ITEM-1 SHALL CONFIRM TO EN45545-HL-3

SL.No.	QTY	PART / STOCK No.	DESCRIPTION	SIZE	COMPANY STD./I.S	Wt. (Kg)
					MATERIAL	
6	2	555-56360	PAD			
5	2	RFB1420665	HEX.HD.BOLT M6x65 TO IS:1364(Pt-3)-2002/ Matl.:-IS-1367(P14)-84 Gr A2-70, STAINLESS STEEL WITH PRE APPLIED ADHESIVE			
4	2	RFN5540652	HEX. NUT WITH FLANGE M6 TO ISO 7044-83/ Matl.:-IS-1367(P14)-84 Gr A2-70, STAINLESS STEEL			
3	2	525-56148-3	T-BOLT ASSY		ASSY	
2	1	525-56148-2	PLATE	t1	AISI 304	
1	2	525-56148-1	CLEAT		NYLON6	

ALT.NO.	ECN NO/CHANGES	DATE	BY	CHKD	APPD

PRODUCT: MUMBAI METRO CARS L2 & L7

REF DRG:

MATERIAL:

HEAT TREAT.:

SURFACE TREAT.:

TITLE: CLEAT ASSY, D34x3

APPD	VS	
REVD		
CHKD	SNH	
DRWN	JAGADISH	29.08.19
SCALE	SHEET / OF	Wt.(Kg) 0

BEML LIMITED

DRG No. 525-56148

ALT

A3

GRADE No.	N1	N2	N3	N4	N5	N6	N7	N8	N9	N10	N11	N12
VALUE	0.025	0.05	0.1	0.2	0.4	0.8	1.6	3.2	6.3	12.5	25	50
SYMBOL												

SURFACE ROUGHNESS

COPY RIGHT & CONFIDENTIAL THIS DOCUMENT IS THE EXCLUSIVE PROPERTY OF BEML & CONTAINS CONFIDENTIAL INFORMATION. THIS DOCUMENT OR ITS CONTENTS SHALL NOT BE USED, REPRODUCED OR DISCLOSED IN WHOLE OR IN PART, WITHOUT PRIOR WRITTEN PERMISSION OF BEML. THIS DOCUMENT & ALL ITS COPIES SHALL BE RETURNED TO BEML ON DEMAND DRAWING RELEASED FROM PLM, PHYSICAL SIGNATURE NOT REQUIRED

MACHINING DEVIATIONS FOR LINEAR DIMENSIONS	RANGE	0 - 6	6 - 30	30 - 120	120 - 315	315-1000	1000-2000	2000-4000	ABOVE 4000	RA
	TOLERANCE	±0.1	±0.2	±0.3	±0.5	±0.8	±1.2	±2	±3	~

FOR DIMENSIONAL TOLERANCES OF SHEET METAL PARTS AND WELDED STRUCTURES, REFER STD. RD-227

UNSPECIFIED TOLERANCE FOR LINEAR AND ANGULAR DIMENSIONS REF. IS 2102 (PT-1) (MEDIUM) | QUALITY OF WELD JOINTS REF, RD 230 MEDIUM

VALUES OF SURFACE TEXTURE SHALL BE AS PER COMPANY STD DS. 1012.C.

WELDING SHALL BE CARRIED OUT AS PER IS: 9595-96

STATUS:

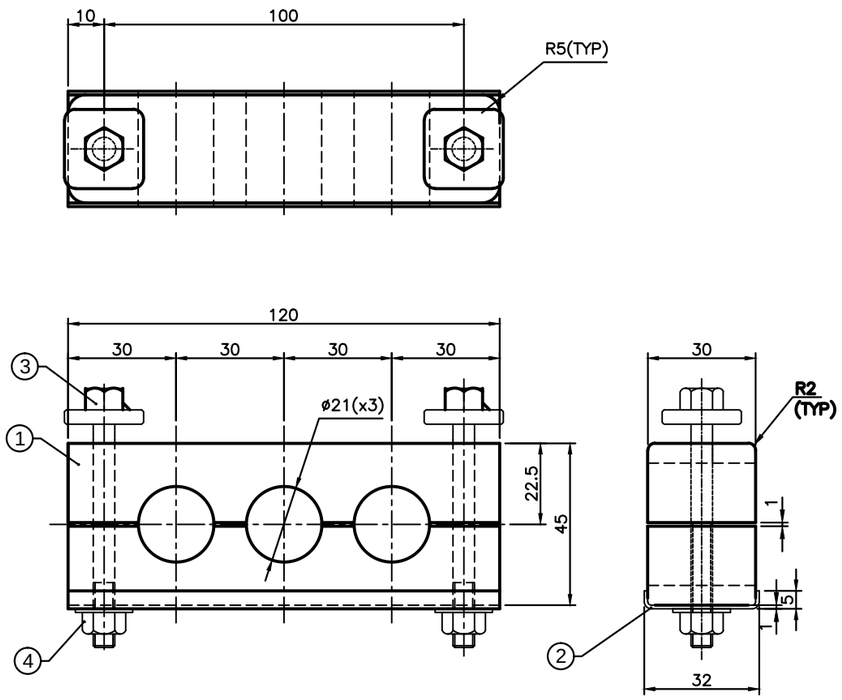

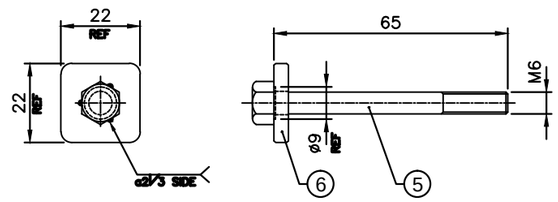

DETAIL-3

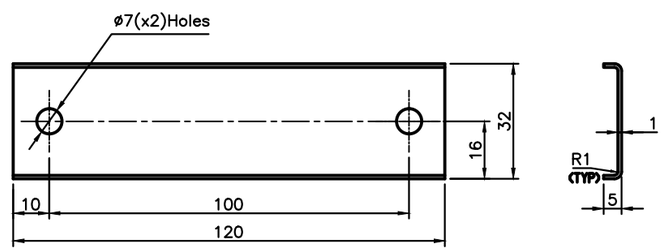

DETAIL-2

NOTE:

1. REMOVE ALL SHARP EDGES
2. FOR CLEATS Min TENSILE STRENGTH: 65 N/mm²
3. BURNING RESISTANCE : SELF EXTINGUISH.
4. ITEM-1 SHALL CONFIRM TO EN45545-HL-3

UNCONTROLLED

SL.No.	QTY	PART / STOCK No.	DESCRIPTION	SIZE	COMPANY STD./I.S	Wt. (Kg)
					MATERIAL	
6	2	555-56360	PAD			
5	2	RFB1420665	HEX.HD.BOLT M6x65 TO IS:1364(Pt-3)-2002/ Matl.:-IS-1367(P14)-84 Gr A2-70, STAINLESS STEEL WITH PRE APPLIED ADHESIVE			
4	2	RFN5540652	HEX. NUT WITH FLANGE M6 TO ISO 7044-83/ Matl.:-IS-1367(P14)-84 Gr A2-70, STAINLESS STEEL			
3	2	525-56149-3	T-BOLT ASSY		ASSY	
2	1	525-56149-2	PLATE	t1	AISI 304	
1	2	525-56149-1	CLEAT		NYLON6	

ALT.NO.	ECN NO/CHANGES	DATE	BY	CHKD	APPD

PRODUCT	MUMBAI METRO CARS L2 & L7		
REF DRG			
MATERIAL			
HEAT TREAT.		APPD	VS
SURFACE TREAT.		REVD	
TITLE	CLEAT ASSY, D21x3	CHKD	SNH
		DRWN	JAGADISH 29.08.19
		SCALE	SHEET / OF / Wt.(Kg) 0
	BEML LIMITED	DRG No.	525-56149
		ALT	

A3

GRADE No.	N1	N2	N3	N4	N5	N6	N7	N8	N9	N10	N11	N12
VALUE	0.025	0.05	0.1	0.2	0.4	0.8	1.6	3.2	6.3	12.5	25	50
SYMBOL												

SURFACE ROUGHNESS

COPY RIGHT & CONFIDENTIAL THIS DOCUMENT IS THE EXCLUSIVE PROPERTY OF BEML & CONTAINS CONFIDENTIAL INFORMATION. THIS DOCUMENT OR ITS CONTENTS SHALL NOT BE USED, REPRODUCED OR DISCLOSED IN WHOLE OR IN PART, WITHOUT PRIOR WRITTEN PERMISSION OF BEML. THIS DOCUMENT & ALL ITS COPIES SHALL BE RETURNED TO BEML ON DEMAND DRAWING RELEASED FROM PLM, PHYSICAL SIGNATURE NOT REQUIRED

GRADE No.	N1	N2	N3	N4	N5	N6	N7	N8	N9	N10	N11	N12
VALUE	0.025	0.05	0.1	0.2	0.4	0.8	1.6	3.2	6.3	12.5	25	50
SYMBOL												

SURFACE ROUGHNESS

MACHINING DEVIATIONS FOR LINEAR DIMENSIONS	RANGE	0 - 6	6 - 30	30 - 120	120 - 315	315-1000	1000-2000	2000-4000	ABOVE 4000	RA
	TOLERANCE	±0.1	±0.2	±0.3	±0.5	±0.8	±1.2	±2	±3	~

FOR DIMENSIONAL TOLERANCES OF SHEET METAL PARTS AND WELDED STRUCTURES, REFER STD. RD-227

UNSPECIFIED TOLERANCE FOR LINEAR AND ANGULAR DIMENSIONS REF. IS 2102 (PT-1) (MEDIUM) | QUALITY OF WELD JOINTS REF, RD 230 MEDIUM

VALUES OF SURFACE TEXTURE SHALL BE AS PER COMPANY STD DS. 1012.C.

WELDING SHALL BE CARRIED OUT AS PER IS: 9595-96

STATUS:

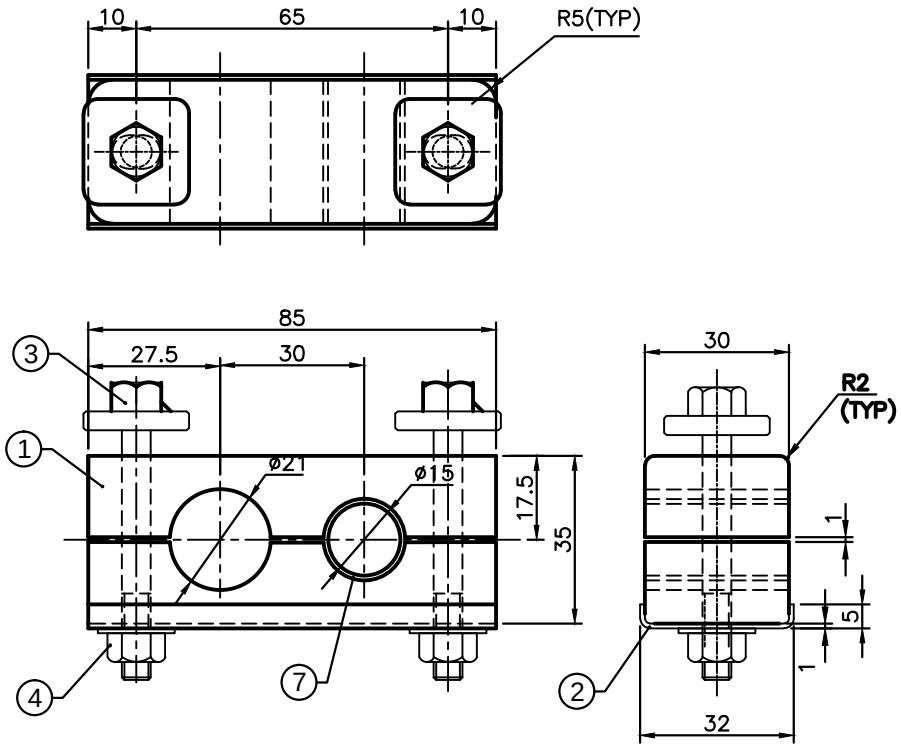

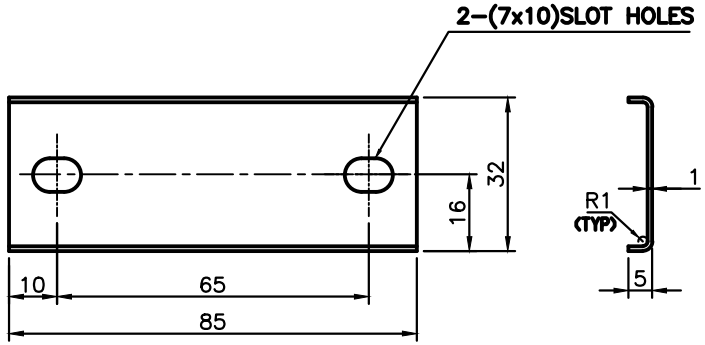

DETAIL-2

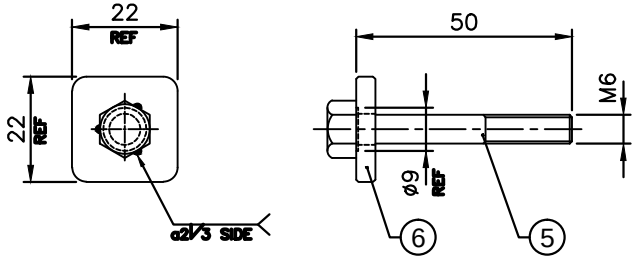

DETAIL-3

NOTE:

1. REMOVE ALL SHARP EDGES
2. FOR CLEATS Min TENSILE STRENGTH: 65 N/mm²
3. BURNING RESISTANCE : SELF EXTINGUISH.
4. ITEM-1&7 SHALL CONFIRM TO EN45545-HL-3

UNCONTROLLED

SL.No.	QTY	PART / STOCK No.	DESCRIPTION	SIZE	COMPANY STD./I.S MATERIAL	Wt. (Kg)
7	2	525-56150-7	PROTECTIVE RUBBER	t1	EPDM	
6	2	555-56360	PAD			
5	2	RFB1420650	HEX.HD.BOLT M6x50 TO IS:1364(Pt-3)-2002/ Matl.:-IS-1367(P14)-84 Gr A2-70, STAINLESS STEEL WITH PRE APPLIED ADHESIVE			
4	2	RFN5540652	HEX. NUT WITH FLANGE M6 TO ISO 7044-83/ Matl.:-IS-1367(P14)-84 Gr A2-70, STAINLESS STEEL			
3	2	525-56150-3	T-BOLT ASSY		ASSY	
2	1	525-56150-2	PLATE	t1	AISI 304	
1	2	525-56150-1	CLEAT		NYLON6	

ALT.NO.	ECN NO/CHANGES	DATE	BY	CHKD	APPD

PRODUCT	MUMBAI METRO CARS L2&L7		
REF DRG			
MATERIAL			
HEAT TREAT.		APPD	VS
SURFACE TREAT.		REVD	
TITLE	CLEAT ASSY, PG9xSQ50	CHKD	SNH
		DRWN	VISHNU 27.11.19
		SCALE	SHEET OF Wt.(Kg) 0
BEML LIMITED		DRG No.	525-56150
		ALT	

A3

MACHINING DEVIATIONS FOR LINEAR DIMENSIONS	RANGE	0 - 6	6 - 30	30 - 120	120 - 315	315-1000	1000-2000	2000-4000	ABOVE 4000	RA
	TOLERANCE	±0.1	±0.2	±0.3	±0.5	±0.8	±1.2	±2	±3	~

FOR DIMENSIONAL TOLERANCES OF SHEET METAL PARTS AND WELDED STRUCTURES, REFER STD. RD-227

UNSPECIFIED TOLERANCE FOR LINEAR AND ANGULAR DIMENSIONS REF. IS 2102 (PT-1) (MEDIUM) | QUALITY OF WELD JOINTS REF, RD 230 MEDIUM

VALUES OF SURFACE TEXTURE SHALL BE AS PER COMPANY STD DS. 1012.C.

WELDING SHALL BE CARRIED OUT AS PER IS: 9595-96

STATUS:

UNCONTROLLED

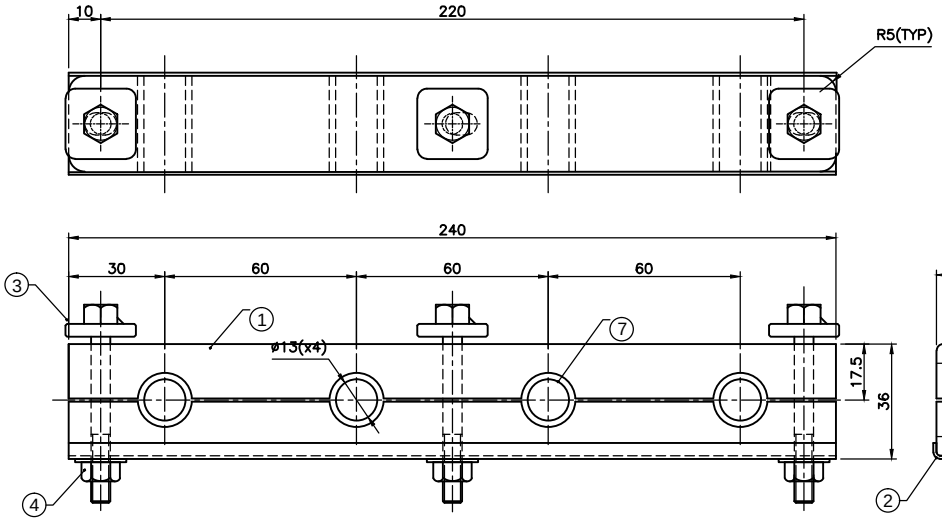

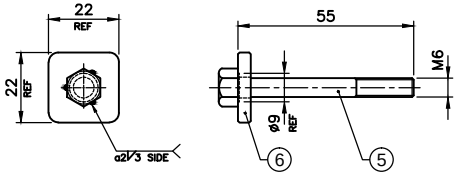

DETAIL-3

NOTE:

1. REMOVE ALL SHARP EDGES
2. FOR CLEATS Min TENSILE STRENGTH: 65 N/mm²
3. BURNING RESISTANCE : SELF EXTINGUISH.
4. ITEM-1&7 SHALL CONFIRM TO EN45545-HL-3

SL.No.	QTY	PART / STOCK No.	DESCRIPTION	SIZE	COMPANY STD./I.S / MATERIAL	Wt. (Kg)
7	8	525-56151-7	PROTECTIVE RUBBER	t2	EPDM	
6	3	555-56360	PAD			
5	3	RFB1420655	HEX.HD.BOLT M6x55 TO IS:1364(Pt-3)-2002/ Matl.:-IS-1367(P14)-84 Gr A2-70, STAINLESS STEEL WITH PRE APPLIED ADHESIVE			
4	3	RFN5540652	HEX. NUT WITH FLANGE M6 TO ISO 7044-83/ Matl.:-IS-1367(P14)-84 Gr A2-70, STAINLESS STEEL			
3	3	525-56151-3	T-BOLT ASSY		ASSY	
2	1	525-56151-2	PLATE	t1	AISI 304	
1	2	525-56151-1	CLEAT		NYLON6	

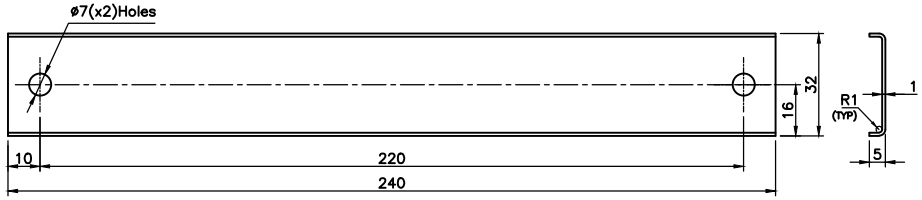

DETAIL-2

ALT.NO.	ECN NO/CHANGES	DATE	BY	CHKD	APPD

PRODUCT	MUMBAI METRO CARS L2&L7		
REF DRG			
MATERIAL			
HEAT TREAT.		APPD	VS
SURFACE TREAT.		REVD	
TITLE	CLEAT ASSY, SQ50x4	CHKD	SNH
		DRWN	VISHNU 27.11.19
		SCALE	SHEET OF / Wt.(Kg) 0
BEML LIMITED		DRG No.	525-56151
		ALT	

A3

COPY RIGHT & CONFIDENTIAL THIS DOCUMENT IS THE EXCLUSIVE PROPERTY OF BEML & CONTAINS CONFIDENTIAL INFORMATION. THIS DOCUMENT OR ITS CONTENTS SHALL NOT BE USED, REPRODUCED OR DISCLOSED IN WHOLE OR IN PART, WITHOUT PRIOR WRITTEN PERMISSION OF BEML. THIS DOCUMENT & ALL ITS COPIES SHALL BE RETURNED TO BEML ON DEMAND DRAWING RELEASED FROM PLM, PHYSICAL SIGNATURE NOT REQUIRED

GRADE No.	N12	N11	N10	N9	N8	N7	N6	N5	N4	N3	N2	N1
VALUE	50	25	12.5	6.3	3.2	1.6	0.8	0.4	0.2	0.1	0.05	0.025
SYMBOL												

SURFACE ROUGHNESS

COPY RIGHT & CONFIDENTIAL THIS DOCUMENT IS THE EXCLUSIVE PROPERTY OF BEML & CONTAINS CONFIDENTIAL INFORMATION. THIS DOCUMENT OR ITS CONTENTS SHALL NOT BE USED, REPRODUCED OR DISCLOSED IN WHOLE OR IN PART, WITHOUT PRIOR WRITTEN PERMISSION OF BEML. THIS DOCUMENT & ALL ITS COPIES SHALL BE RETURNED TO BEML ON DEMAND DRAWING RELEASED FROM PLM, PHYSICAL SIGNATURE NOT REQUIRED

MACHINING DEVIATIONS FOR LINEAR DIMENSIONS	RANGE	0 - 6	6 - 30	30 - 120	120 - 315	315-1000	1000-2000	2000-4000	ABOVE 4000	RA
	TOLERANCE	±0.1	±0.2	±0.3	±0.5	±0.8	±1.2	±2	±3	~

FOR DIMENSIONAL TOLERANCES OF SHEET METAL PARTS AND WELDED STRUCTURES, REFER STD. RD-227

UNSPECIFIED TOLERANCE FOR LINEAR AND ANGULAR DIMENSIONS REF. IS 2102 (PT-1) (MEDIUM) | QUALITY OF WELD JOINTS REF, RD 230 MEDIUM

VALUES OF SURFACE TEXTURE SHALL BE AS PER COMPANY STD DS. 1012.C.

WELDING SHALL BE CARRIED OUT AS PER IS: 9595-96

STATUS:

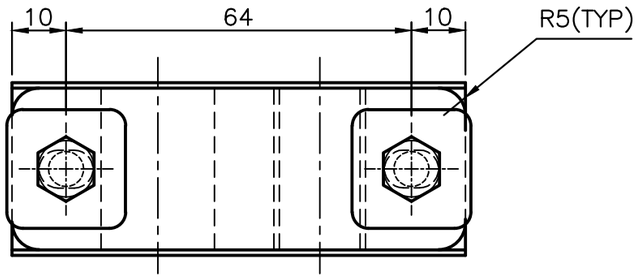

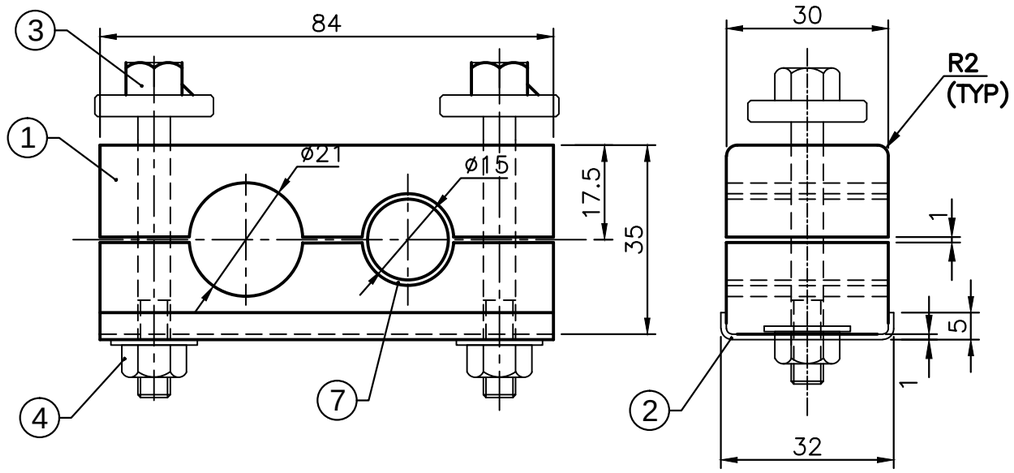

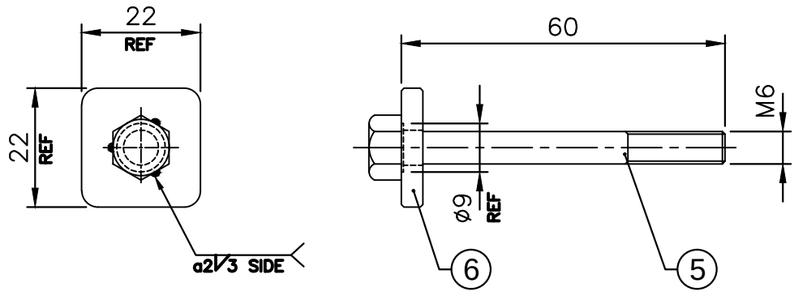

DETAIL-3

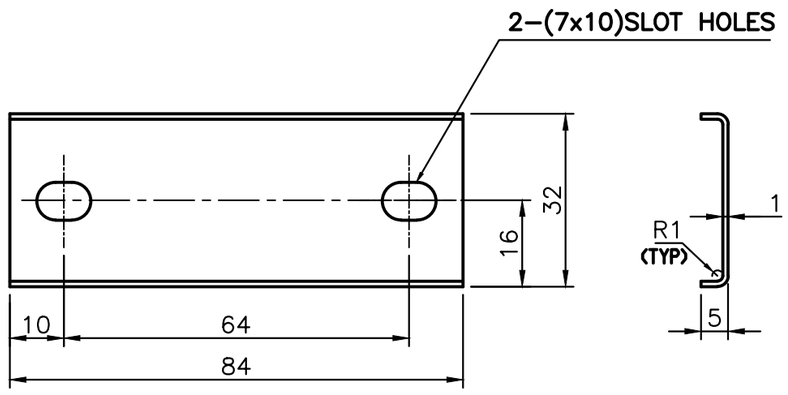

DETAIL-2

NOTE:

1. REMOVE ALL SHARP EDGES
2. FOR CLEATS Min TENSILE STRENGTH: 65 N/mm²
3. BURNING RESISTANCE : SELF EXTINGUISH.
4. ITEM-1&7 SHALL CONFIRM TO EN45545-HL-3

UNCONTROLLED

SL.No.	QTY	PART / STOCK No.	DESCRIPTION	SIZE	COMPANY STD./I.S / MATERIAL	Wt. (Kg)
7	2	525-56152-7	PROTECTIVE RUBBER	t1	EPDM	
6	2	555-56360	PAD			
5	2	RFB1420660	HEX.HD.BOLT M6x60 TO IS:1364(Pt-3)-2002/ Matl.:-IS-1367(P14)-84 Gr A2-70, STAINLESS STEEL WITH PRE APPLIED ADHESIVE			
4	2	RFN5540652	HEX. NUT WITH FLANGE M6 TO ISO 7044-83/ Matl.:-IS-1367(P14)-84 Gr A2-70, STAINLESS STEEL			
3	2	525-56152-3	T-BOLT ASSY		ASSY	
2	1	525-56152-2	PLATE	t1	AISI 304	
1	2	525-56152-1	CLEAT		NYLON6	

ALT.NO.	ECN NO/CHANGES	DATE	BY	CHKD	APPD

PRODUCT: MUMBAI METRO CARS L2&L7

REF DRG

MATERIAL

HEAT TREAT.

SURFACE TREAT.

TITLE: CLEAT ASSY

APPD: VS

REVD

CHKD: SNH

DRWN: VISHNU 27.11.19

SCALE | SHEET | OF | Wt.(Kg): 0

BEML LIMITED

DRG No. 525-56152

ALT

A3

GRADE No.	N1	N2	N3	N4	N5	N6	N7	N8	N9	N10	N11	N12
VALUE	0.025	0.05	0.1	0.2	0.4	0.8	1.6	3.2	6.3	12.5	25	50
SYMBOL												

SURFACE ROUGHNESS

COPY RIGHT & CONFIDENTIAL THIS DOCUMENT IS THE EXCLUSIVE PROPERTY OF BEML & CONTAINS CONFIDENTIAL INFORMATION. THIS DOCUMENT OR ITS CONTENTS SHALL NOT BE USED, REPRODUCED OR DISCLOSED IN WHOLE OR IN PART, WITHOUT PRIOR WRITTEN PERMISSION OF BEML. THIS DOCUMENT & ALL ITS COPIES SHALL BE RETURNED TO BEML ON DEMAND DRAWING RELEASED FROM PLM, PHYSICAL SIGNATURE NOT REQUIRED

MACHINING DEVIATIONS FOR LINEAR DIMENSIONS	RANGE	0 - 6	6 - 30	30 - 120	120 - 315	315-1000	1000-2000	2000-4000	ABOVE 4000	RA
	TOLERANCE	±0.1	±0.2	±0.3	±0.5	±0.8	±1.2	±2	±3	~

FOR DIMENSIONAL TOLERANCES OF SHEET METAL PARTS AND WELDED STRUCTURES, REFER STD. RD-227

UNSPECIFIED TOLERANCE FOR LINEAR AND ANGULAR DIMENSIONS REF. IS 2102 (PT-1) (MEDIUM) | QUALITY OF WELD JOINTS REF, RD 230 MEDIUM

VALUES OF SURFACE TEXTURE SHALL BE AS PER COMPANY STD DS. 1012.C.

WELDING SHALL BE CARRIED OUT AS PER IS: 9595-96

STATUS:

UNCONTROLLED

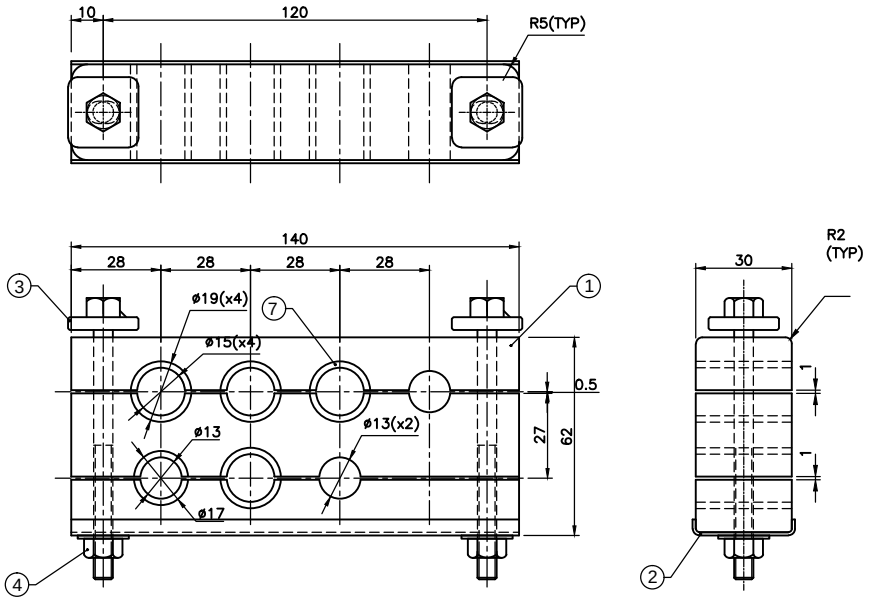

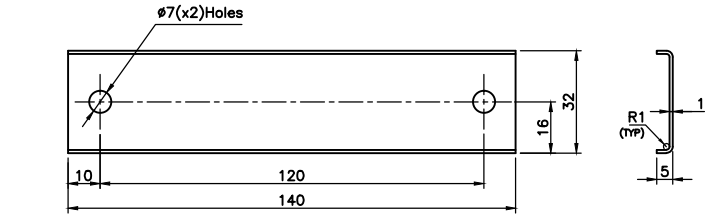

DETAIL-2

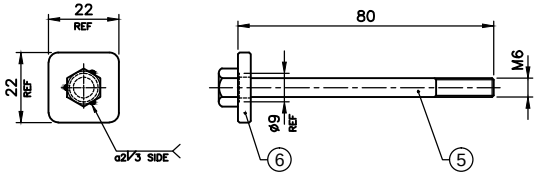

DETAIL-3

NOTE:

1. REMOVE ALL SHARP EDGES
2. FOR CLEATS Min TENSILE STRENGTH: 65 N/mm²
3. BURNING RESISTANCE : SELF EXTINGUISH.
4. ITEM-1&7 SHALL CONFIRM TO EN45545-HL-3

SL.No.	QTY	PART / STOCK No.	DESCRIPTION	SIZE	COMPANY STD./I.S / MATERIAL	Wt. (Kg)
7	10	525-56153-7	PROTECTIVE RUBBER	t2	EPDM	
6	2	555-56360	PAD			
5	2	RFB1420680	HEX.HD.BOLT M6x80 TO IS:1364(Pt-3)-2002/ Matl.:-IS-1367(P14)-84 Gr A2-70, STAINLESS STEEL WITH PRE APPLIED ADHESIVE			
4	2	RFN5540652	HEX. NUT WITH FLANGE M6 TO ISO 7044-83/ Matl.:-IS-1367(P14)-84 Gr A2-70, STAINLESS STEEL			
3	2	525-56153-3	T-BOLT ASSY		ASSY	
2	1	525-56153-2	PLATE	t1	AISI 304	
1	2	525-56153-1	CLEAT		NYLON6	

ALT.NO.	ECN NO/CHANGES	DATE	BY	CHKD	APPD

PRODUCT: MUMBAI METRO CARS L2&L7

REF DRG

MATERIAL

HEAT TREAT.

SURFACE TREAT.

TITLE: CLEAT ASSY, SQ50x5xPG9

APPD	VS	
REVD		
CHKD	SNH	
DRWN	VISHNU	27.11.19
SCALE	SHEET OF	Wt.(Kg) 0

BEML LIMITED

DRG No. 525-56153

ALT

A3

GRADE No.	N1	N2	N3	N4	N5	N6	N7	N8	N9	N10	N11	N12
VALUE	0.025	0.05	0.1	0.2	0.4	0.8	1.6	3.2	6.3	12.5	25	50
SYMBOL												

SURFACE ROUGHNESS

COPY RIGHT & CONFIDENTIAL THIS DOCUMENT IS THE EXCLUSIVE PROPERTY OF BEML & CONTAINS CONFIDENTIAL INFORMATION. THIS DOCUMENT OR ITS CONTENTS SHALL NOT BE USED, REPRODUCED OR DISCLOSED IN WHOLE OR IN PART, WITHOUT PRIOR WRITTEN PERMISSION OF BEML. THIS DOCUMENT & ALL ITS COPIES SHALL BE RETURNED TO BEML ON DEMAND DRAWING RELEASED FROM PLM, PHYSICAL SIGNATURE NOT REQUIRED

MACHINING DEVIATIONS FOR LINEAR DIMENSIONS	RANGE	0 - 6	6 - 30	30 - 120	120 - 315	315-1000	1000-2000	2000-4000	ABOVE 4000	RA
	TOLERANCE	±0.1	±0.2	±0.3	±0.5	±0.8	±1.2	±2	±3	~

FOR DIMENSIONAL TOLERANCES OF SHEET METAL PARTS AND WELDED STRUCTURES, REFER STD. RD-227

UNSPECIFIED TOLERANCE FOR LINEAR AND ANGULAR DIMENSIONS REF. IS 2102 (PT-1) (MEDIUM) | QUALITY OF WELD JOINTS REF, RD 230 MEDIUM

VALUES OF SURFACE TEXTURE SHALL BE AS PER COMPANY STD DS. 1012.C.

WELDING SHALL BE CARRIED OUT AS PER IS: 9595-96

STATUS:

UNCONTROLLED

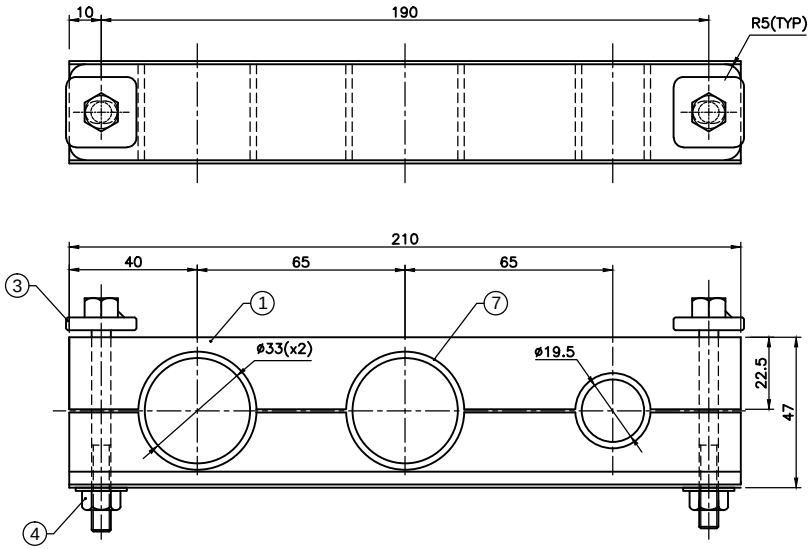

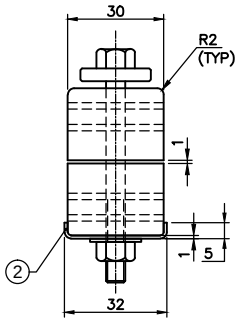

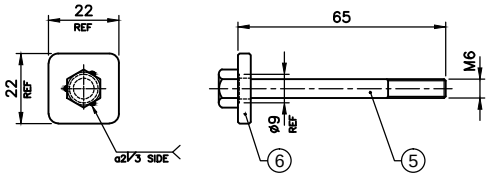

DETAIL-3

NOTE:

1. REMOVE ALL SHARP EDGES
2. FOR CLEATS Min TENSILE STRENGTH: 65 N/mm²
3. BURNING RESISTANCE : SELF EXTINGUISH.
4. ITEM-1&7 SHALL CONFIRM TO EN45545-HL-3

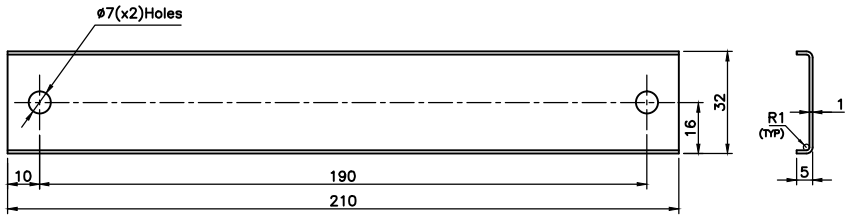

DETAIL-2

SL.No.	QTY	PART / STOCK No.	DESCRIPTION	SIZE	COMPANY STD./I.S	Wt. (Kg)
					MATERIAL	
7	6	525-56154-7	PROTECTIVE RUBBER	t2	EPDM	
6	2	555-56360	PAD			
5	2	RFB1420665	HEX.HD.BOLT M6x65 TO IS:1364(Pt-3)-2002/ Matl.:-IS-1367(P14)-84 Gr A2-70, STAINLESS STEEL WITH PRE APPLIED ADHESIVE			
4	2	RFN5540652	HEX. NUT WITH FLANGE M6 TO ISO 7044-83/ Matl.:-IS-1367(P14)-84 Gr A2-70, STAINLESS STEEL			
3	2	525-56154-3	T-BOLT ASSY		ASSY	
2	1	525-56154-2	PLATE	t1	AISI 304	
1	2	525-56154-1	CLEAT		NYLON6	

ALT.NO.	ECN NO/CHANGES	DATE	BY	CHKD	APPD

PRODUCT	MUMBAI METRO CARS L2&L7		
REF DRG			
MATERIAL			
HEAT TREAT.		APPD	VS
SURFACE TREAT.		REVD	
TITLE	CLEAT ASSY, SQ240x2xSQ95	CHKD	SNH
		DRWN	VISHNU 27.11.19
		SCALE	SHEET OF / Wt.(Kg) 0
BEML LIMITED		DRG No.	525-56154
		ALT	

A3

GRADE No.	N1	N2	N3	N4	N5	N6	N7	N8	N9	N10	N11	N12
VALUE	0.025	0.05	0.1	0.2	0.4	0.8	1.6	3.2	6.3	12.5	25	50
SYMBOL												

SURFACE ROUGHNESS

MACHINING DEVIATIONS FOR LINEAR DIMENSIONS	RANGE	0 - 6	6 - 30	30 - 120	120 - 315	315-1000	1000-2000	2000-4000	ABOVE 4000	RA
	TOLERANCE	±0.1	±0.2	±0.3	±0.5	±0.8	±1.2	±2	±3	~

FOR DIMENSIONAL TOLERANCES OF SHEET METAL PARTS AND WELDED STRUCTURES, REFER STD. RD-227

UNSPECIFIED TOLERANCE FOR LINEAR AND ANGULAR DIMENSIONS REF. IS 2102 (PT-1) (MEDIUM) | QUALITY OF WELD JOINTS REF, RD 230 MEDIUM

VALUES OF SURFACE TEXTURE SHALL BE AS PER COMPANY STD DS. 1012.C.

WELDING SHALL BE CARRIED OUT AS PER IS: 9595-96

STATUS:

UNCONTROLLED

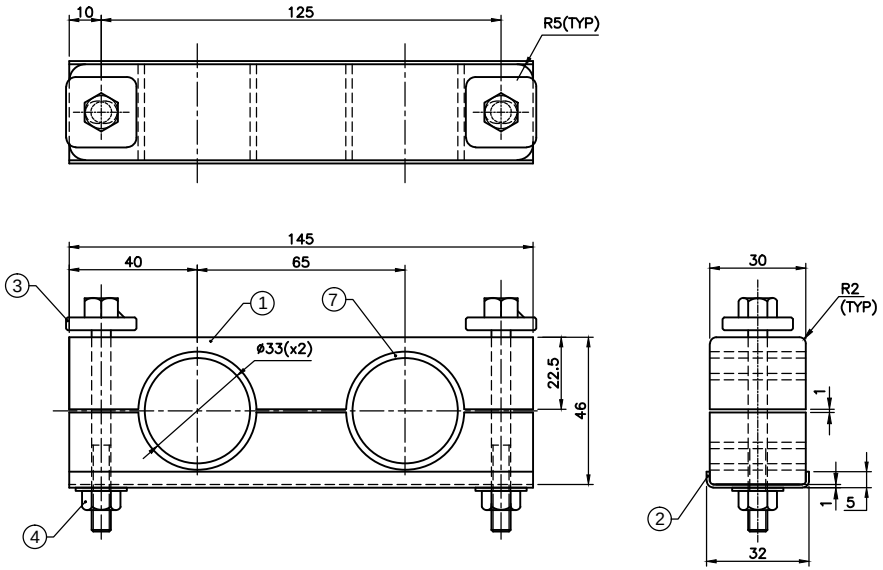

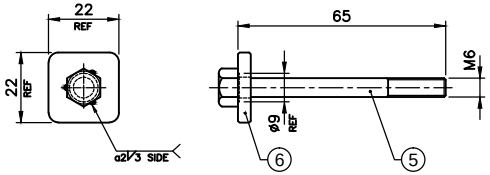

DETAIL-3

NOTE:

1. REMOVE ALL SHARP EDGES
2. FOR CLEATS Min TENSILE STRENGTH: 65 N/mm²
3. BURNING RESISTANCE : SELF EXTINGUISH.
4. ITEM-1&7 SHALL CONFIRM TO EN45545-HL-3

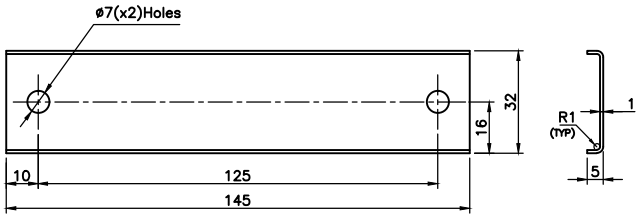

DETAIL-2

SL.No.	QTY	PART / STOCK No.	DESCRIPTION	SIZE	COMPANY STD./I.S	Wt. (Kg)
					MATERIAL	
7	4	525-56155-7	PROTECTIVE RUBBER	t2	EPDM	
6	2	555-56360	PAD			
5	2	RFB1420665	HEX.HD.BOLT M6x65 TO IS:1364(Pt-3)-2002/ Matl.:-IS-1367(P14)-84 Gr A2-70, STAINLESS STEEL WITH PRE APPLIED ADHESIVE			
4	2	RFN5540652	HEX. NUT WITH FLANGE M6 TO ISO 7044-83/ Matl.:-IS-1367(P14)-84 Gr A2-70, STAINLESS STEEL			
3	2	525-56155-3	T-BOLT ASSY		ASSY	
2	1	525-56155-2	PLATE	t1	AISI 304	
1	2	525-56155-1	CLEAT		NYLON6	

ALT.NO.	ECN NO/CHANGES	DATE	BY	CHKD	APPD

PRODUCT	MUMBAI METRO CARS L2&L7		
REF DRG			
MATERIAL			
HEAT TREAT.		APPD	VS
SURFACE TREAT.		REVD	
TITLE	CLEAT ASSY, SQ240x2	CHKD	SNH
		DRWN	VISHNU 27.11.19
		SCALE	SHEET OF / Wt.(Kg) 0
BEML LIMITED		DRG No.	525-56155
		ALT	

A3

COPY RIGHT & CONFIDENTIAL THIS DOCUMENT IS THE EXCLUSIVE PROPERTY OF BEML & CONTAINS CONFIDENTIAL INFORMATION. THIS DOCUMENT OR ITS CONTENTS SHALL NOT BE USED, REPRODUCED OR DISCLOSED IN WHOLE OR IN PART, WITHOUT PRIOR WRITTEN PERMISSION OF BEML. THIS DOCUMENT & ALL ITS COPIES SHALL BE RETURNED TO BEML ON DEMAND DRAWING RELEASED FROM PLM, PHYSICAL SIGNATURE NOT REQUIRED

SURFACE ROUGHNESS	N1	N2	N3	N4	N5	N6	N7	N8	N9	N10	N11	N12
GRADE No.	0.025	0.05	0.1	0.2	0.4	0.8	1.6	3.2	6.3	12.5	25	50
VALUE												
SYMBOL												

COPY RIGHT & CONFIDENTIAL THIS DOCUMENT IS THE EXCLUSIVE PROPERTY OF BEML & CONTAINS CONFIDENTIAL INFORMATION. THIS DOCUMENT OR ITS CONTENTS SHALL NOT BE USED, REPRODUCED OR DISCLOSED IN WHOLE OR IN PART, WITHOUT PRIOR WRITTEN PERMISSION OF BEML. THIS DOCUMENT & ALL ITS COPIES SHALL BE RETURNED TO BEML ON DEMAND
DRAWING RELEASED FROM PLM, PHYSICAL SIGNATURE NOT REQUIRED

MACHINING DEVIATIONS FOR LINEAR DIMENSIONS	RANGE	0 - 6	6 - 30	30 - 120	120 - 315	315-1000	1000-2000	2000-4000	ABOVE 4000	RA
	TOLERANCE	±0.1	±0.2	±0.3	±0.5	±0.8	±1.2	±2	±3	~

FOR DIMENSIONAL TOLERANCES OF SHEET METAL PARTS AND WELDED STRUCTURES, REFER STD. RD-227

UNSPECIFIED TOLERANCE FOR LINEAR AND ANGULAR DIMENSIONS REF. IS 2102 (PT-1) (MEDIUM) | QUALITY OF WELD JOINTS REF, RD 230 MEDIUM

VALUES OF SURFACE TEXTURE SHALL BE AS PER COMPANY STD DS. 1012.C.

WELDING SHALL BE CARRIED OUT AS PER IS: 9595-96

STATUS:

UNCONTROLLED

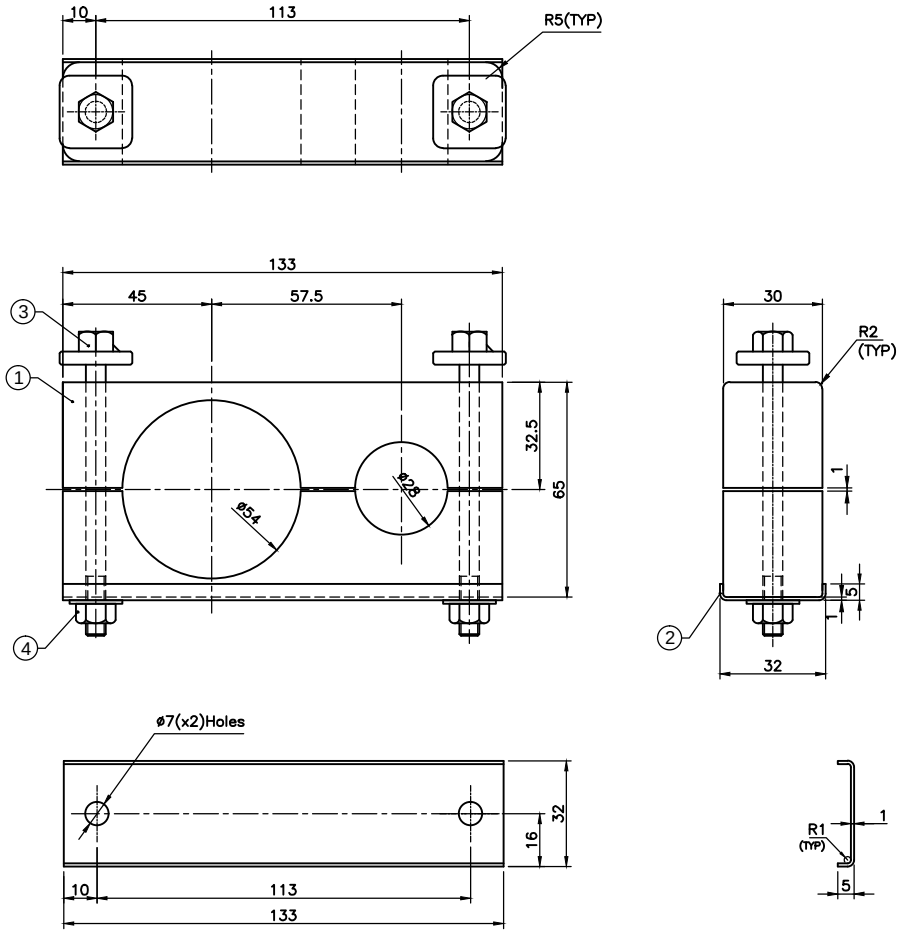

DETAIL-2

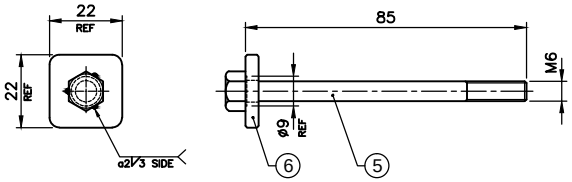

DETAIL-3

SL.No.	QTY	PART / STOCK No.	DESCRIPTION	SIZE	COMPANY STD./I.S	Wt. (Kg)
6	2	555-56360	PAD			
5	2	RFB1420685	HEX.HD.BOLT M6x85 TO IS:1364(Pt-3)-2002/ Matl.:-IS-1367(P14)-84 Gr A2-70, STAINLESS STEEL WITH PRE APPLIED ADHESIVE			
4	2	RFN5540652	HEX. NUT WITH FLANGE M6 TO ISO 7044-83/ Matl.:-IS-1367(P14)-84 Gr A2-70, STAINLESS STEEL			
3	2	525-56156-3	T-BOLT ASSY		ASSY	
2	1	525-56156-2	PLATE	t1	AISI 304	
1	2	525-56156-1	CLEAT		NYLON6	
					MATERIAL	

NOTE:

1. REMOVE ALL SHARP EDGES
2. FOR CLEATS Min TENSILE STRENGTH: 65 N/mm²
3. BURNING RESISTANCE : SELF EXTINGUISH.
4. ITEM-1 SHALL CONFIRM TO EN45545-HL-3

ALT.NO.	ECN NO/CHANGES	DATE	BY	CHKD	APPD

PRODUCT	MUMBAI METRO CARS L2&L7		
REF DRG			
MATERIAL			
HEAT TREAT.		APPD	VS
SURFACE TREAT.		REVD	
TITLE	CLEAT ASSY	CHKD	SNH
		DRWN	JAGADISH 27.11.19
		SCALE	SHEET OF / Wt.(Kg) 0
BEML LIMITED		DRG No.	525-56156
		ALT	

A3

GRADE No.	N12	N11	N10	N9	N8	N7	N6	N5	N4	N3	N2	N1
VALUE	50	25	12.5	6.3	3.2	1.6	0.8	0.4	0.2	0.1	0.05	0.025
SYMBOL	~											

SURFACE ROUGHNESS

MACHINING DEVIATIONS FOR LINEAR DIMENSIONS	RANGE	0 - 6	6 - 30	30 - 120	120 - 315	315-1000	1000-2000	2000-4000	ABOVE 4000	RA
	TOLERANCE	±0.1	±0.2	±0.3	±0.5	±0.8	±1.2	±2	±3	~

FOR DIMENSIONAL TOLERANCES OF SHEET METAL PARTS AND WELDED STRUCTURES, REFER STD. RD-227

UNSPECIFIED TOLERANCE FOR LINEAR AND ANGULAR DIMENSIONS REF. IS 2102 (PT-1) (MEDIUM) | QUALITY OF WELD JOINTS REF, RD 230 MEDIUM

VALUES OF SURFACE TEXTURE SHALL BE AS PER COMPANY STD DS. 1012.C.

WELDING SHALL BE CARRIED OUT AS PER IS: 9595-96

STATUS:

UNCONTROLLED

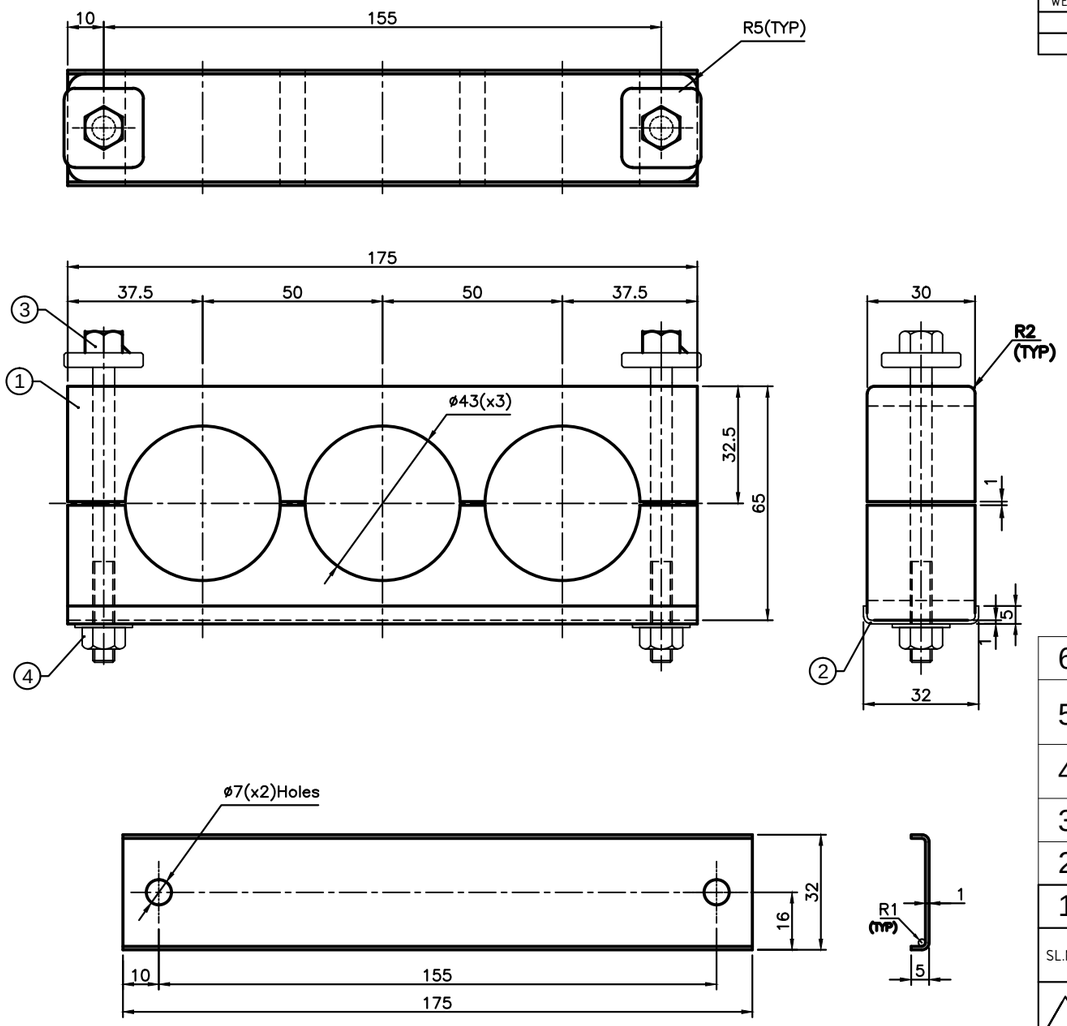

DETAIL-2

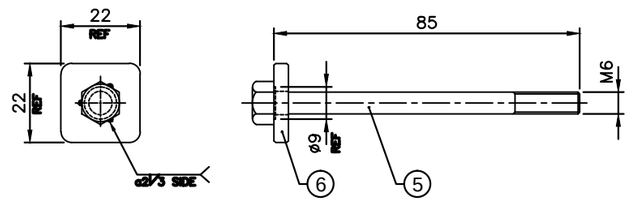

DETAIL-3

SL.No.	QTY	PART / STOCK No.	DESCRIPTION	SIZE	COMPANY STD./I.S	Wt. (Kg)
					MATERIAL	
6	2	555-56360	PAD			
5	2	RFB1420685	HEX.HD.BOLT M6x85 TO IS:1364(Pt-3)-2002/ Matl.:-IS-1367(P14)-84 Gr A2-70, STAINLESS STEEL WITH PRE APPLIED ADHESIVE			
4	2	RFN5540652	HEX. NUT WITH FLANGE M6 TO ISO 7044-83/ Matl.:-IS-1367(P14)-84 Gr A2-70, STAINLESS STEEL			
3	2	525-56157-3	T-BOLT ASSY		ASSY	
2	1	525-56157-2	PLATE	t1	AISI 304	
1	2	525-56157-1	CLEAT		NYLON6	

ALT.NO.	ECN NO/CHANGES	DATE	BY	CHKD	APPD

PRODUCT	MUMBAI METRO CARS L2&L7		
REF DRG			
MATERIAL			
HEAT TREAT.		APPD	VS
SURFACE TREAT.		REVD	
TITLE	CLEAT ASSY PG36x3	CHKD	SNH
		DRWN	VISHNU 27.11.19
		SCALE	SHEET OF / Wt.(Kg) 0
	BEML LIMITED	DRG No.	525-56157
		ALT	

A3

NOTE:

1. REMOVE ALL SHARP EDGES
2. FOR CLEATS Min TENSILE STRENGTH: 65 N/mm²
3. BURNING RESISTANCE : SELF EXTINGUISH.
4. ITEM-1 SHALL CONFIRM TO EN45545-HL-3

COPY RIGHT & CONFIDENTIAL THIS DOCUMENT IS THE EXCLUSIVE PROPERTY OF BEML & CONTAINS CONFIDENTIAL INFORMATION. THIS DOCUMENT OR ITS CONTENTS SHALL NOT BE USED, REPRODUCED OR DISCLOSED IN WHOLE OR IN PART, WITHOUT PRIOR WRITTEN PERMISSION OF BEML. THIS DOCUMENT & ALL ITS COPIES SHALL BE RETURNED TO BEML ON DEMAND DRAWING RELEASED FROM PLM, PHYSICAL SIGNATURE NOT REQUIRED

GRADE No.	N1	N2	N3	N4	N5	N6	N7	N8	N9	N10	N11	N12
VALUE	0.025	0.05	0.1	0.2	0.4	0.8	1.6	3.2	6.3	12.5	25	50
SYMBOL												

SURFACE ROUGHNESS

MACHINING DEVIATIONS FOR LINEAR DIMENSIONS	RANGE	0 - 6	6 - 30	30 - 120	120 - 315	315-1000	1000-2000	2000-4000	ABOVE 4000	RA
	TOLERANCE	±0.1	±0.2	±0.3	±0.5	±0.8	±1.2	±2	±3	~

FOR DIMENSIONAL TOLERANCES OF SHEET METAL PARTS AND WELDED STRUCTURES, REFER STD. RD-227

UNSPECIFIED TOLERANCE FOR LINEAR AND ANGULAR DIMENSIONS REF. IS 2102 (PT-1) (MEDIUM) | QUALITY OF WELD JOINTS REF, RD 230 MEDIUM

VALUES OF SURFACE TEXTURE SHALL BE AS PER COMPANY STD DS. 1012.C.

WELDING SHALL BE CARRIED OUT AS PER IS: 9595-96

STATUS:

UNCONTROLLED

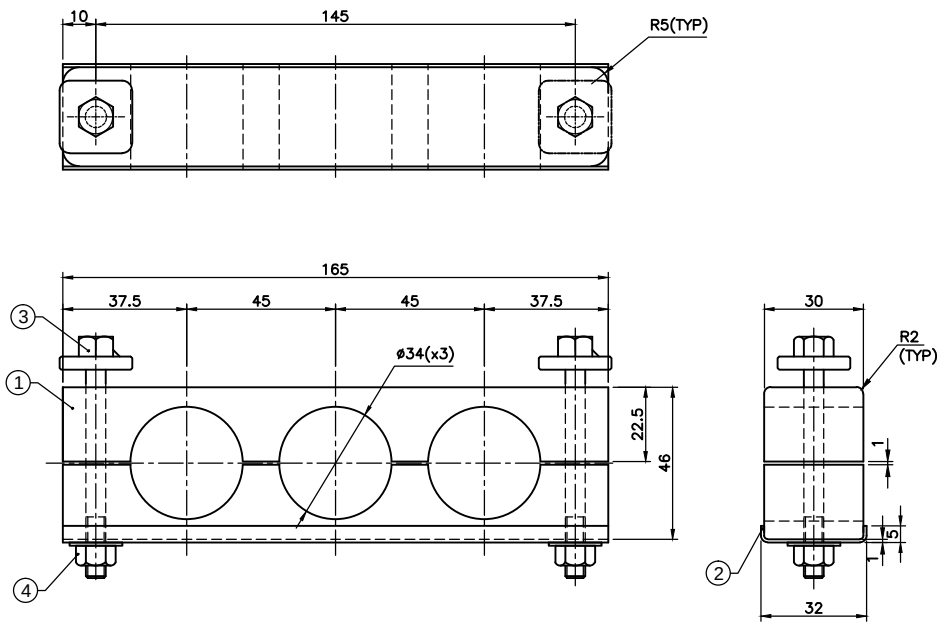

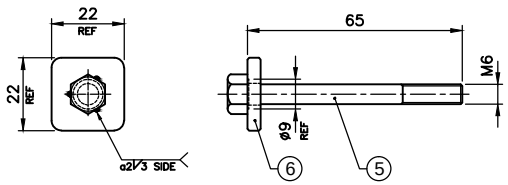

DETAIL-3

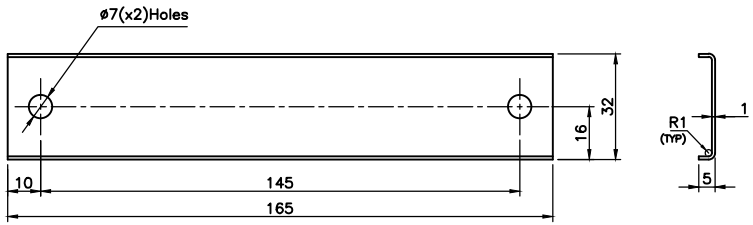

DETAIL-2

NOTE:

1. REMOVE ALL SHARP EDGES
2. FOR CLEATS Min TENSILE STRENGTH: 65 N/mm²
3. BURNING RESISTANCE : SELF EXTINGUISH.
4. ITEM-1 SHALL CONFIRM TO EN45545-HL-3

SL.No.	QTY	PART / STOCK No.	DESCRIPTION	SIZE	COMPANY STD./I.S	Wt. (Kg)
6	2	555-56360	PAD			
5	2	RFB1420665	HEX.HD.BOLT M6x65 TO IS:1364(Pt-3)-2002/ Matl.:-IS-1367(P14)-84 Gr A2-70, STAINLESS STEEL WITH PRE APPLIED ADHESIVE			
4	2	RFN5540652	HEX. NUT WITH FLANGE M6 TO ISO 7044-83/ Matl.:-IS-1367(P14)-84 Gr A2-70, STAINLESS STEEL			
3	2	525-56158-3	T-BOLT ASSY		ASSY	
2	1	525-56158-2	PLATE	t1	AISI 304	
1	2	525-56158-1	CLEAT		NYLON6	
					MATERIAL	

ALT.NO.	ECN NO/CHANGES	DATE	BY	CHKD	APPD

PRODUCT: MUMBAI METRO CARS L2&L7

REF DRG

MATERIAL

HEAT TREAT.

SURFACE TREAT.

TITLE: CLEAT ASSY

APPD: VS

REVD

CHKD: SNH

DRWN: VISHNU 27.11.19

SCALE | SHEET | OF | Wt.(Kg) 0

BEML LIMITED

DRG No. 525-56158

ALT

A3

COPY RIGHT & CONFIDENTIAL THIS DOCUMENT IS THE EXCLUSIVE PROPERTY OF BEML & CONTAINS CONFIDENTIAL INFORMATION. THIS DOCUMENT OR ITS CONTENTS SHALL NOT BE USED, REPRODUCED OR DISCLOSED IN WHOLE OR IN PART, WITHOUT PRIOR WRITTEN PERMISSION OF BEML. THIS DOCUMENT & ALL ITS COPIES SHALL BE RETURNED TO BEML ON DEMAND DRAWING RELEASED FROM PLM, PHYSICAL SIGNATURE NOT REQUIRED

SURFACE ROUGHNESS

GRADE No.	N12	N11	N10	N9	N8	N7	N6	N5	N4	N3	N2	N1
VALUE	50	25	12.5	6.3	3.2	1.6	0.8	0.4	0.2	0.1	0.05	0.025
SYMBOL	~											

COPY RIGHT & CONFIDENTIAL THIS DOCUMENT IS THE EXCLUSIVE PROPERTY OF BEML & CONTAINS CONFIDENTIAL INFORMATION. THIS DOCUMENT OR ITS CONTENTS SHALL NOT BE USED, REPRODUCED OR DISCLOSED IN WHOLE OR IN PART, WITHOUT PRIOR WRITTEN PERMISSION OF BEML. THIS DOCUMENT & ALL ITS COPIES SHALL BE RETURNED TO BEML ON DEMAND DRAWING RELEASED FROM PLM, PHYSICAL SIGNATURE NOT REQUIRED

SURFACE ROUGHNESS	N1	N2	N3	N4	N5	N6	N7	N8	N9	N10	N11	N12
VALUE	0.025	0.05	0.1	0.2	0.4	0.8	1.6	3.2	6.3	12.5	25	50
SYMBOL	▷	▷	▷	▷	▷	▷	▷	▷	▷	▷	▷	~

GRADE No.

MACHINING DEVIATIONS FOR LINEAR DIMENSIONS	RANGE	0 - 6	6 - 30	30 - 120	120 - 315	315-1000	1000-2000	2000-4000	ABOVE 4000	RA
	TOLERANCE	±0.1	±0.2	±0.3	±0.5	±0.8	±1.2	±2	±3	~

FOR DIMENSIONAL TOLERANCES OF SHEET METAL PARTS AND WELDED STRUCTURES, REFER STD. RD-227

UNSPECIFIED TOLERANCE FOR LINEAR AND ANGULAR DIMENSIONS REF. IS 2102 (PT-1) (MEDIUM) | QUALITY OF WELD JOINTS REF, RD 230 MEDIUM

VALUES OF SURFACE TEXTURE SHALL BE AS PER COMPANY STD DS. 1012.C.

WELDING SHALL BE CARRIED OUT AS PER IS: 9595-96

STATUS:

UNCONTROLLED

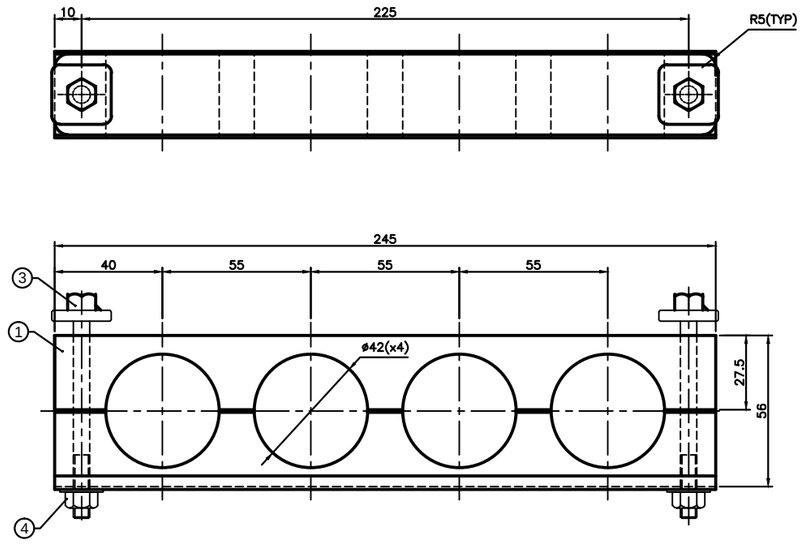

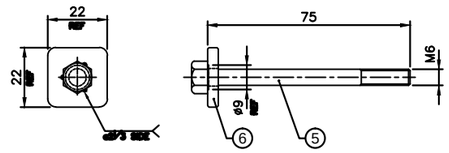

DETAIL-3

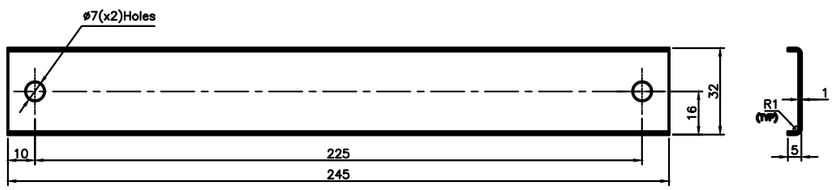

DETAIL-2

NOTE:

1. REMOVE ALL SHARP EDGES
2. FOR CLEATS Min TENSILE STRENGTH: 65 N/mm²
3. BURNING RESISTANCE : SELF EXTINGUISH.
4. ITEM-1 SHALL CONFIRM TO EN45545-HL-3

SL.No.	QTY	PART / STOCK No.	DESCRIPTION	SIZE	COMPANY STD./I.S	Wt. (Kg)
					MATERIAL	
6	2	555-56360	PAD			
5	2	RFB1420675	HEX.HD.BOLT M6x75 TO IS:1364(Pt-3)-2002/ Matl.:-IS-1367(P14)-84 Gr A2-70, STAINLESS STEEL WITH PRE APPLIED ADHESIVE			
4	2	RFN5540652	HEX. NUT WITH FLANGE M6 TO ISO 7044-83/ Matl.:-IS-1367(P14)-84 Gr A2-70, STAINLESS STEEL			
3	2	525-56159-3	T-BOLT ASSY		ASSY	
2	1	525-56159-2	PLATE	t2	AISI 304	
1	2	525-56159-1	CLEAT		NYLON6	

ALT.NO.	ECN NO/CHANGES	DATE	BY	CHKD	APPD

PRODUCT	MUMBAI METRO CARS L2&L7		
REF DRG			
MATERIAL			
HEAT TREAT.		APPD	VS
SURFACE TREAT.		REVD	
TITLE	CLEAT ASSY, PG36x4	CHKD	SNH
		DRWN	VISHNU 27.11.19
		SCALE	SHEET OF / Wt.(Kg) 0
	BEML LIMITED	DRG No.	525-56159
		ALT	

A3

MACHINING DEVIATIONS FOR LINEAR DIMENSIONS	RANGE	0 - 6	6 - 30	30 - 120	120 - 315	315-1000	1000-2000	2000-4000	ABOVE 4000	RA
	TOLERANCE	±0.1	±0.2	±0.3	±0.5	±0.8	±1.2	±2	±3	~

FOR DIMENSIONAL TOLERANCES OF SHEET METAL PARTS AND WELDED STRUCTURES, REFER STD. RD-227

UNSPECIFIED TOLERANCE FOR LINEAR AND ANGULAR DIMENSIONS REF. IS 2102 (PT-1) (MEDIUM) | QUALITY OF WELD JOINTS REF, RD 230 MEDIUM

VALUES OF SURFACE TEXTURE SHALL BE AS PER COMPANY STD DS. 1012.C.

WELDING SHALL BE CARRIED OUT AS PER IS: 9595-96

STATUS:

UNCONTROLLED

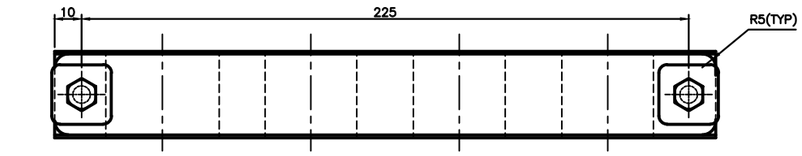

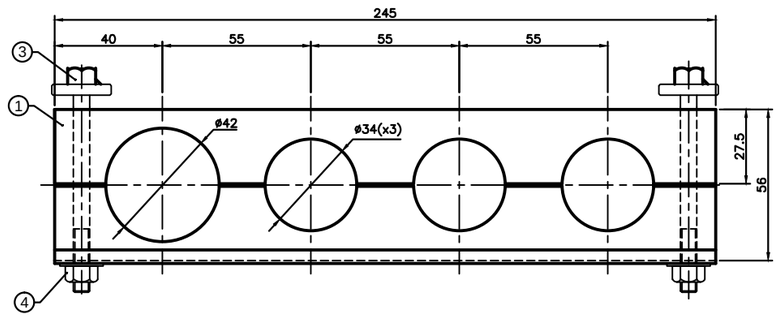

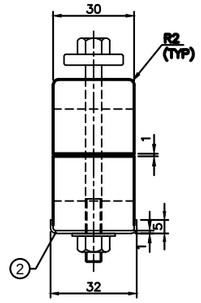

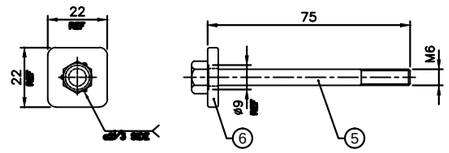

DETAIL-3

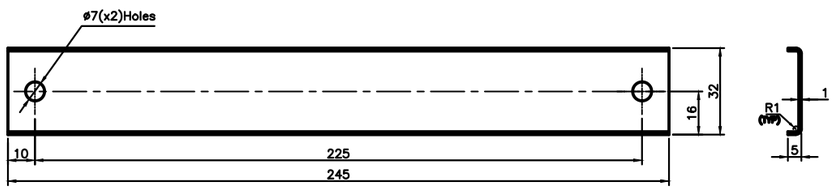

DETAIL-2

NOTE:

1. REMOVE ALL SHARP EDGES
2. FOR CLEATS Min TENSILE STRENGTH: 65 N/mm²
3. BURNING RESISTANCE : SELF EXTINGUISH.
4. ITEM-1 SHALL CONFIRM TO EN45545-HL-3

SL.No.	QTY	PART / STOCK No.	DESCRIPTION	SIZE	COMPANY STD./I.S	Wt. (Kg)
					MATERIAL	
6	2	555-56360	PAD			
5	2	RFB1420675	HEX.HD.BOLT M6x75 TO IS:1364(Pt-3)-2002/ Matl:IS-1367(P14)-84, Gr A2-70, STAINLESS STEEL WITH PRE APPLIED ADHESIVE			
4	2	RFN5540652	HEX. NUT WITH FLANGE M6 TO ISO 7044-83/ Matl:IS-1367(P14)-84, Gr A2-70, STAINLESS STEEL			
3	2	525-56160-3	T-BOLT ASSY		ASSY	
2	1	525-56160-2	PLATE	t2	AISI 304	
1	2	525-56160-1	CLEAT		NYLON6	

ALT.NO.	ECN NO/CHANGES	DATE	BY	CHKD	APPD

PRODUCT: MUMBAI METRO CARS L2&L7

REF DRG

MATERIAL

HEAT TREAT.

SURFACE TREAT.

TITLE: CLEAT ASSY, PG29x3xPG36

APPD	VS	
REVD		
CHKD	SNH	
DRWN	VISHNU	27.11.19
SCALE	SHEET	Wt.(Kg)
	OF	0

BEML LIMITED

DRG No. 525-56160

ALT

A3

COPY RIGHT & CONFIDENTIAL THIS DOCUMENT IS THE EXCLUSIVE PROPERTY OF BEML & CONTAINS CONFIDENTIAL INFORMATION. THIS DOCUMENT OR ITS CONTENTS SHALL NOT BE USED, REPRODUCED OR DISCLOSED IN WHOLE OR IN PART, WITHOUT PRIOR WRITTEN PERMISSION OF BEML. THIS DOCUMENT & ALL ITS COPIES SHALL BE RETURNED TO BEML ON DEMAND DRAWING RELEASED FROM PLM, PHYSICAL SIGNATURE NOT REQUIRED

GRADE No.	N1	N2	N3	N4	N5	N6	N7	N8	N9	N10	N11	N12
VALUE	0.025	0.05	0.1	0.2	0.4	0.8	1.6	3.2	6.3	12.5	25	50
SYMBOL												

SURFACE ROUGHNESS

COPY RIGHT & CONFIDENTIAL THIS DOCUMENT IS THE EXCLUSIVE PROPERTY OF BEML & CONTAINS CONFIDENTIAL INFORMATION. THIS DOCUMENT OR ITS CONTENTS SHALL NOT BE USED, REPRODUCED OR DISCLOSED IN WHOLE OR IN PART, WITHOUT PRIOR WRITTEN PERMISSION OF BEML. THIS DOCUMENT & ALL ITS COPIES SHALL BE RETURNED TO BEML ON DEMAND DRAWING RELEASED FROM PLM, PHYSICAL SIGNATURE NOT REQUIRED

MACHINING DEVIATIONS FOR LINEAR DIMENSIONS	RANGE	0 - 6	6 - 30	30 - 120	120 - 315	315-1000	1000-2000	2000-4000	ABOVE 4000	RA
	TOLERANCE	±0.1	±0.2	±0.3	±0.5	±0.8	±1.2	±2	±3	~

FOR DIMENSIONAL TOLERANCES OF SHEET METAL PARTS AND WELDED STRUCTURES, REFER STD. RD-227

UNSPECIFIED TOLERANCE FOR LINEAR AND ANGULAR DIMENSIONS REF. IS 2102 (PT-1) (MEDIUM) | QUALITY OF WELD JOINTS REF, RD 230 MEDIUM

VALUES OF SURFACE TEXTURE SHALL BE AS PER COMPANY STD DS. 1012.C.

WELDING SHALL BE CARRIED OUT AS PER IS: 9595-96

STATUS:

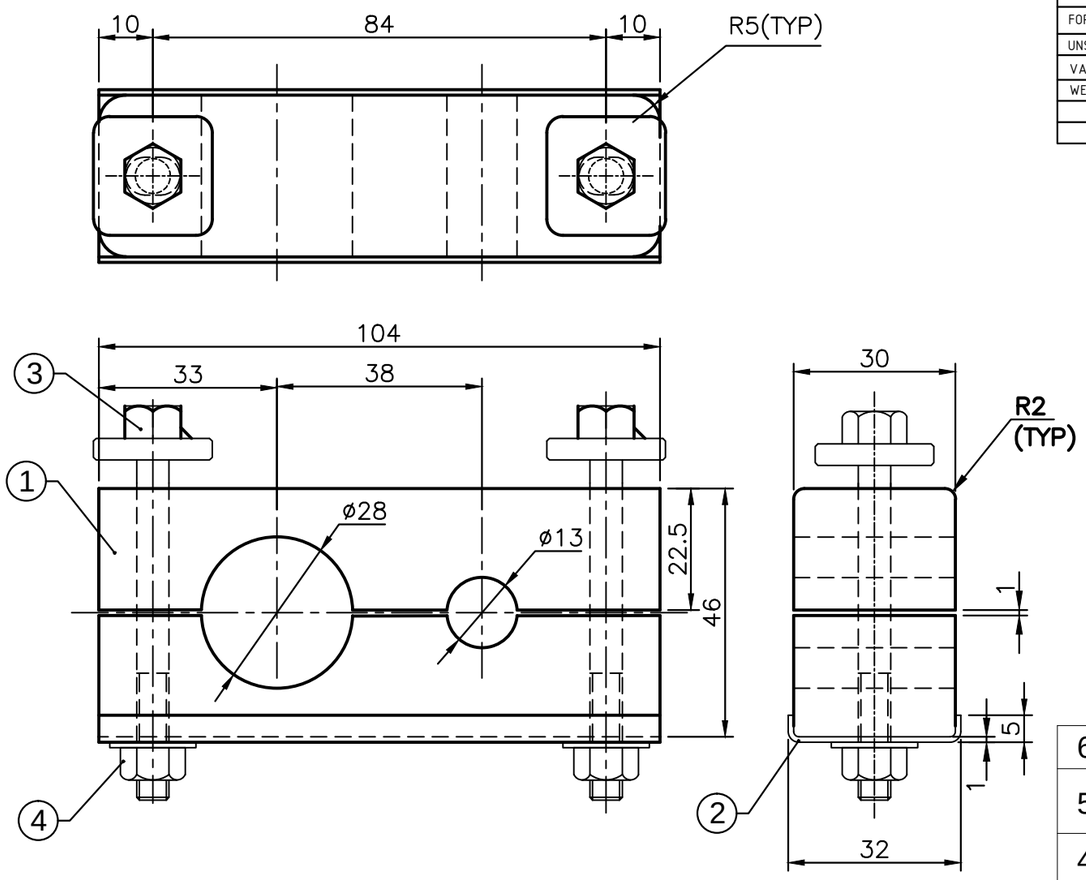

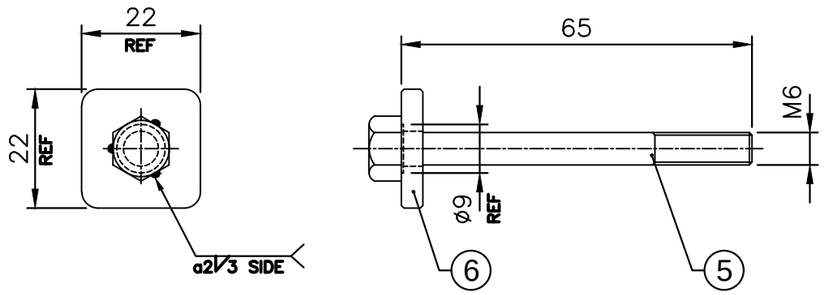

DETAIL-3

UNCONTROLLED

NOTE:

1. REMOVE ALL SHARP EDGES
2. FOR CLEATS Min TENSILE STRENGTH: 65 N/mm²
3. BURNING RESISTANCE : SELF EXTINGUISH.
4. ITEM-1 SHALL CONFIRM TO EN45545-HL-3

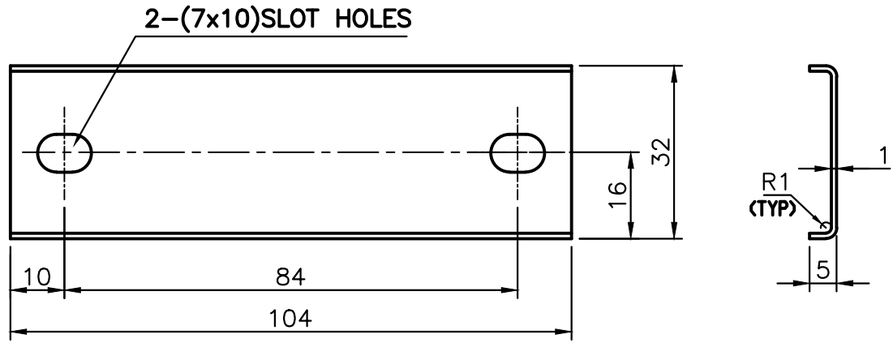

DETAIL-2

SL.No.	QTY	PART / STOCK No.	DESCRIPTION	SIZE	COMPANY STD./I.S	Wt. (Kg)
					MATERIAL	
6	2	555-56360	PAD			
5	2	RFB1420665	HEX.HD.BOLT M6x65 TO IS:1364(Pt-3)-2002/ Matl.:-IS-1367(P14)-84 Gr A2-70, STAINLESS STEEL WITH PRE APPLIED ADHESIVE			
4	2	RFN5540652	HEX. NUT WITH FLANGE M6 TO ISO 7044-83/ Matl.:-IS-1367(P14)-84 Gr A2-70, STAINLESS STEEL			
3	2	525-56161-3	T-BOLT ASSY		ASSY	
2	1	525-56161-2	PLATE	t1	AISI 304	
1	2	525-56161-1	CLEAT		NYLON6	

ALT.NO.	ECN NO/CHANGES	DATE	BY	CHKD	APPD

PRODUCT	MUMBAI METRO CARS L2&L7		
REF DRG			
MATERIAL			
HEAT TREAT.		APPD	VS
SURFACE TREAT.		REVD	
TITLE	CLEAT ASSY	CHKD	SNH
		DRWN	VISHNU 27.11.19
		SCALE	SHEET OF 0 Wt.(Kg)
BEML LIMITED		DRG No.	525-56161
		ALT	

A3

GRADE No.	N1	N2	N3	N4	N5	N6	N7	N8	N9	N10	N11	N12
VALUE	0.025	0.05	0.1	0.2	0.4	0.8	1.6	3.2	6.3	12.5	25	50
SYMBOL												

SURFACE ROUGHNESS

COPY RIGHT & CONFIDENTIAL THIS DOCUMENT IS THE EXCLUSIVE PROPERTY OF BEML & CONTAINS CONFIDENTIAL INFORMATION. THIS DOCUMENT OR ITS CONTENTS SHALL NOT BE USED, REPRODUCED OR DISCLOSED IN WHOLE OR IN PART, WITHOUT PRIOR WRITTEN PERMISSION OF BEML. THIS DOCUMENT & ALL ITS COPIES SHALL BE RETURNED TO BEML ON DEMAND DRAWING RELEASED FROM PLM, PHYSICAL SIGNATURE NOT REQUIRED

MACHINING DEVIATIONS FOR LINEAR DIMENSIONS	RANGE	0 - 6	6 - 30	30 - 120	120 - 315	315-1000	1000-2000	2000-4000	ABOVE 4000	RA
	TOLERANCE	±0.1	±0.2	±0.3	±0.5	±0.8	±1.2	±2	±3	~

FOR DIMENSIONAL TOLERANCES OF SHEET METAL PARTS AND WELDED STRUCTURES, REFER STD. RD-227

UNSPECIFIED TOLERANCE FOR LINEAR AND ANGULAR DIMENSIONS REF. IS 2102 (PT-1) (MEDIUM) | QUALITY OF WELD JOINTS REF, RD 230 MEDIUM

VALUES OF SURFACE TEXTURE SHALL BE AS PER COMPANY STD DS. 1012.C.

WELDING SHALL BE CARRIED OUT AS PER IS: 9595-96

STATUS:

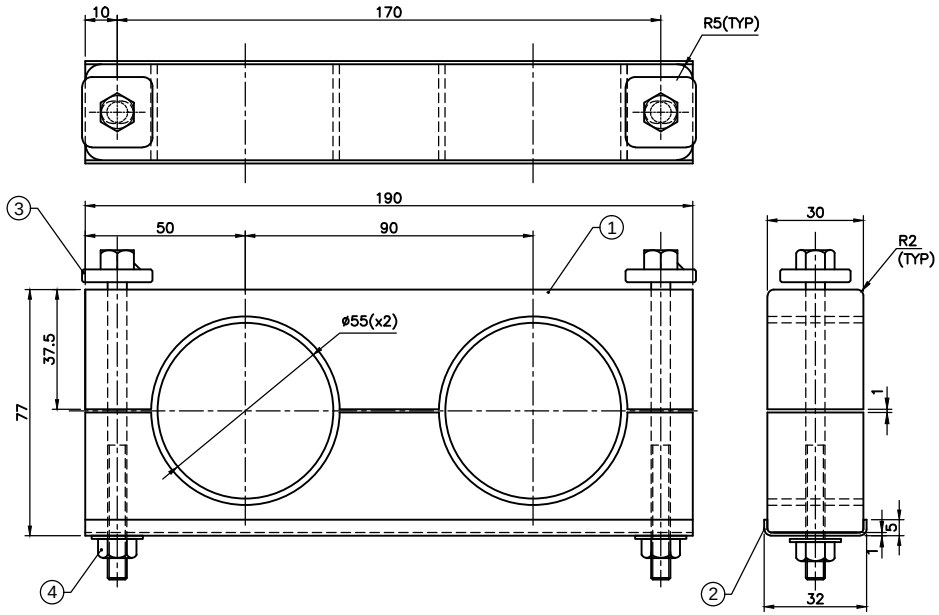

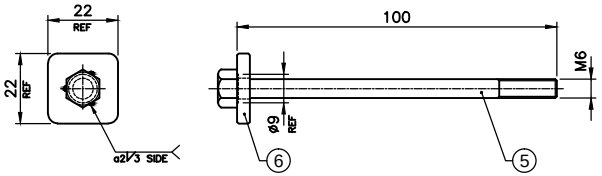

DETAIL-3

UNCONTROLLED

NOTE:

1. REMOVE ALL SHARP EDGES
2. FOR CLEATS Min TENSILE STRENGTH: 65 N/mm²
3. BURNING RESISTANCE : SELF EXTINGUISH.
4. ITEM-1&7 SHALL CONFIRM TO EN45545-HL-3

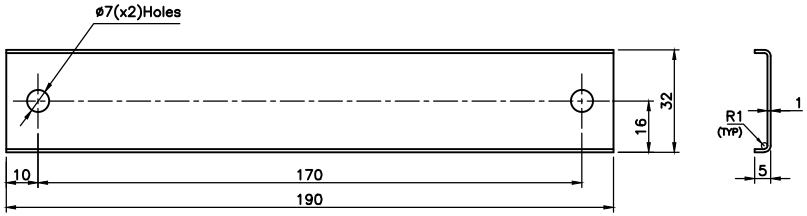

DETAIL-2

SL.No.	QTY	PART / STOCK No.	DESCRIPTION	SIZE	COMPANY STD./I.S MATERIAL	Wt. (Kg)
7	4	525-56162-7	PROTECTIVE RUBBER	t2	EPDM	
6	2	555-56360	PAD			
5	2	RFB1421600	HEX.HD.BOLT M6x100 TO IS:1364(Pt-3)-2002/ Matl.:-IS-1367(P14)-84 Gr A2-70, STAINLESS STEEL WITH PRE APPLIED ADHESIVE			
4	2	RFN5540652	HEX. NUT WITH FLANGE M6 TO ISO 7044-83/ Matl.:-IS-1367(P14)-84 Gr A2-70, STAINLESS STEEL			
3	2	525-56162-3	T-BOLT ASSY		ASSY	
2	1	525-56162-2	PLATE	t1	AISI 304	
1	2	525-56162-1	CLEAT		NYLON6	

ALT.NO.	ECN NO/CHANGES	DATE	BY	CHKD	APPD

PRODUCT: MUMBAI METRO CARS L2&L7

REF DRG

MATERIAL

HEAT TREAT. | APPD: VS

SURFACE TREAT. | REVD

TITLE: CLEAT ASSY, LTJB

CHKD: SNH

DRWN: VISHNU 27.11.19

SCALE | SHEET | OF | Wt.(Kg): 0

BEML LIMITED

DRG No. 525-56162

ALT

A3

GRADE No.	N1	N2	N3	N4	N5	N6	N7	N8	N9	N10	N11	N12
VALUE	0.025	0.05	0.1	0.2	0.4	0.8	1.6	3.2	6.3	12.5	25	50
SYMBOL												

SURFACE ROUGHNESS

MACHINING DEVIATIONS FOR LINEAR DIMENSIONS	RANGE	0 - 6	6 - 30	30 - 120	120 - 315	315-1000	1000-2000	2000-4000	ABOVE 4000	RA
	TOLERANCE	±0.1	±0.2	±0.3	±0.5	±0.8	±1.2	±2	±3	~

FOR DIMENSIONAL TOLERANCES OF SHEET METAL PARTS AND WELDED STRUCTURES, REFER STD. RD-227

UNSPECIFIED TOLERANCE FOR LINEAR AND ANGULAR DIMENSIONS REF. IS 2102 (PT-1) (MEDIUM) | QUALITY OF WELD JOINTS REF, RD 230 MEDIUM

VALUES OF SURFACE TEXTURE SHALL BE AS PER COMPANY STD DS. 1012.C.

WELDING SHALL BE CARRIED OUT AS PER IS: 9595-96

STATUS:

UNCONTROLLED

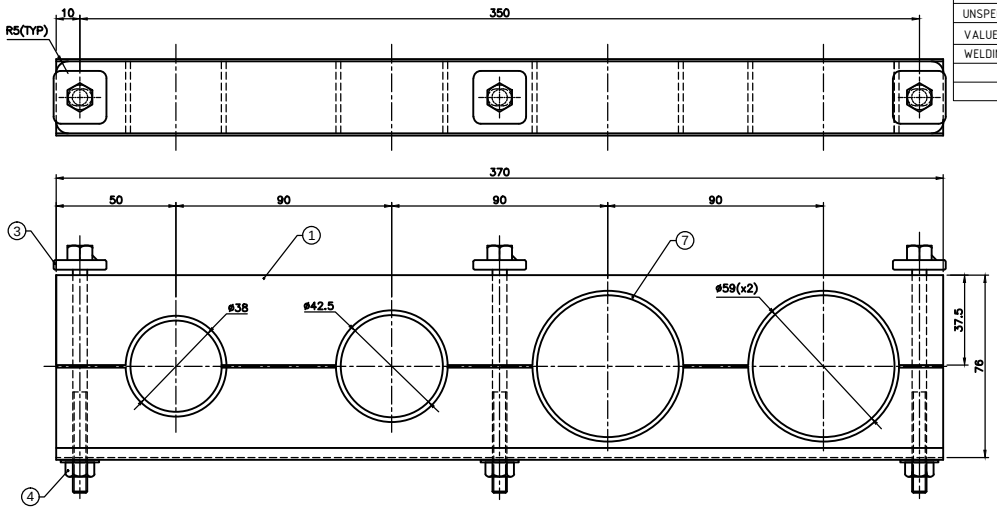

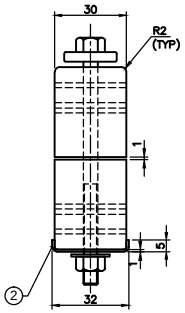

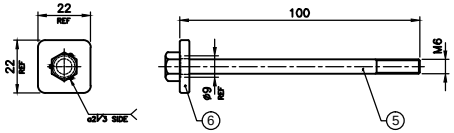

DETAIL-3

NOTE:

1. REMOVE ALL SHARP EDGES
2. FOR CLEATS Min TENSILE STRENGTH: 65 N/mm²
3. BURNING RESISTANCE : SELF EXTINGUISH.
4. ITEM-1&7 SHALL CONFIRM TO EN45545-HL-3

SL.No.	QTY	PART / STOCK No.	DESCRIPTION	SIZE	COMPANY STD./I.S	Wt. (Kg)
					MATERIAL	
7	8	525-56163-7	PROTECTIVE RUBBER	t2	EPDM	
6	3	555-56360	PAD			
5	3	RFB1421600	HEX.HD.BOLT M6x100 TO IS:1364(Pt-3)-2002/ Matl.:-IS-1367(P14)-84 Gr A2-70, STAINLESS STEEL WITH PRE APPLIED ADHESIVE			
4	3	RFN5540652	HEX. NUT WITH FLANGE M6 TO ISO 7044-83/ Matl.:-IS-1367(P14)-84 Gr A2-70, STAINLESS STEEL			
3	3	525-56163-3	T-BOLT ASSY		ASSY	
2	1	525-56163-2	PLATE	t1	AISI 304	
1	2	525-56163-1	CLEAT		NYLON6	

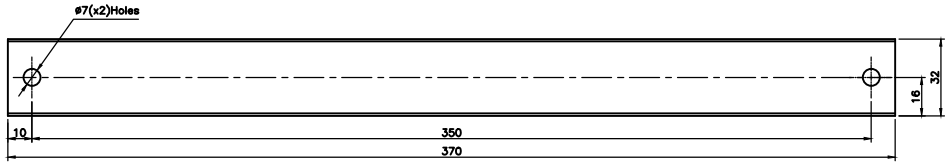

DETAIL-2

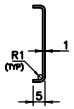

C/S VIEW

ALT.NO.	ECN NO/CHANGES	DATE	BY	CHKD	APPD

PRODUCT	MUMBAI METRO CARS L2&L7		
REF DRG			
MATERIAL			
HEAT TREAT.		APPD	VS
SURFACE TREAT.		REVD	
TITLE	CLEAT ASSY, LTJB	CHKD	SNH
		DRWN	VISHNU 27.11.19
		SCALE	SHEET OF / Wt.(Kg) 0
	BEML LIMITED	DRG No.	525-56163
		ALT	

A3

COPY RIGHT & CONFIDENTIAL THIS DOCUMENT IS THE EXCLUSIVE PROPERTY OF BEML & CONTAINS CONFIDENTIAL INFORMATION. THIS DOCUMENT OR ITS CONTENTS SHALL NOT BE USED, REPRODUCED OR DISCLOSED IN WHOLE OR IN PART, WITHOUT PRIOR WRITTEN PERMISSION OF BEML. THIS DOCUMENT & ALL ITS COPIES SHALL BE RETURNED TO BEML ON DEMAND DRAWING RELEASED FROM PLM, PHYSICAL SIGNATURE NOT REQUIRED

GRADE No.	N12	N11	N10	N9	N8	N7	N6	N5	N4	N3	N2	N1
VALUE	50	25	12.5	6.3	3.2	1.6	0.8	0.4	0.2	0.1	0.05	0.025
SYMBOL												

SURFACE ROUGHNESS

COPY RIGHT & CONFIDENTIAL THIS DOCUMENT IS THE EXCLUSIVE PROPERTY OF BEML & CONTAINS CONFIDENTIAL INFORMATION. THIS DOCUMENT OR ITS CONTENTS SHALL NOT BE USED, REPRODUCED OR DISCLOSED IN WHOLE OR IN PART, WITHOUT PRIOR WRITTEN PERMISSION OF BEML. THIS DOCUMENT & ALL ITS COPIES SHALL BE RETURNED TO BEML ON DEMAND
DRAWING RELEASED FROM PLM, PHYSICAL SIGNATURE NOT REQUIRED

UNCONTROLLED

MACHINING DEVIATIONS FOR LINEAR DIMENSIONS	RANGE	0 - 6	6 - 30	30 - 120	120 - 315	315-1000	1000-2000	2000-4000	ABOVE 4000	RA
	TOLERANCE	±0.1	±0.2	±0.3	±0.5	±0.8	±1.2	±2	±3	~

FOR DIMENSIONAL TOLERANCES OF SHEET METAL PARTS AND WELDED STRUCTURES, REFER STD. RD-227

UNSPECIFIED TOLERANCE FOR LINEAR AND ANGULAR DIMENSIONS REF. IS 2102 (PT-1) (MEDIUM) | QUALITY OF WELD JOINTS REF, RD 230 MEDIUM

VALUES OF SURFACE TEXTURE SHALL BE AS PER COMPANY STD DS. 1012.C.

WELDING SHALL BE CARRIED OUT AS PER IS: 9595-96

STATUS:

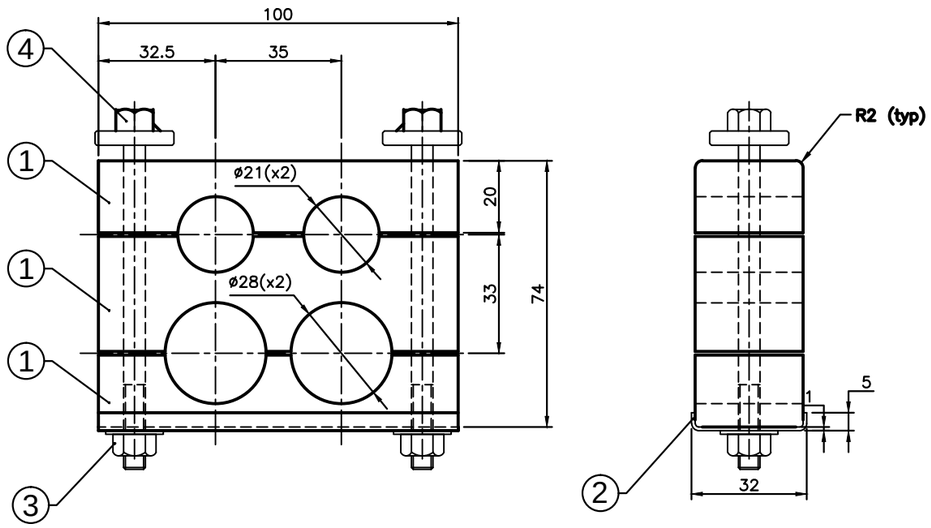

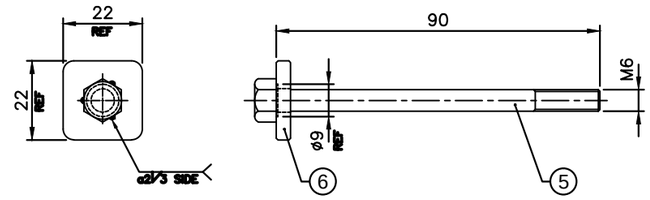

DETAIL-3

NOTE:

1. REMOVE ALL SHARP EDGES
2. FOR CLEATS Min TENSILE STRENGTH: 65 N/mm²
3. BURNING RESISTANCE : SELF EXTINGUISH.
4. ITEM-1 SHALL CONFIRM TO EN45545-HL-3

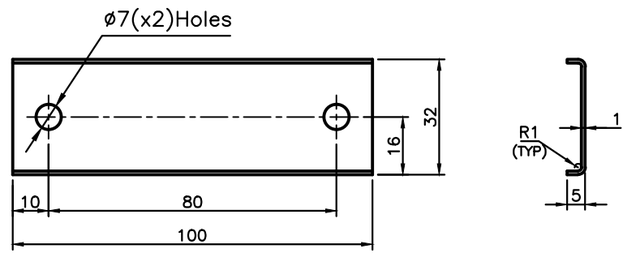

DETAIL-2

SL.No.	QTY	PART / STOCK No.	DESCRIPTION	SIZE	COMPANY STD./I.S	Wt. (Kg)
					MATERIAL	
6	2	555-56360	PAD			
5	2	RFB1421600	HEX.HD.BOLT M6x100 TO IS:1364(Pt-3)-2002/ Matl.:-IS-1367(P14)-84 Gr A2-70, STAINLESS STEEL WITH PRE APPLIED ADHESIVE			
4	2	RFN5540652	HEX. NUT WITH FLANGE M6 TO ISO 7044-83/ Matl.:-IS-1367(P14)-84 Gr A2-70, STAINLESS STEEL			
3	2	525-56164-3	T-BOLT ASSY		ASSY	
2	1	525-56164-2	PLATE	t1	AISI 304	
1	1 set	525-56164-1	CLEAT		NYLON6	

ALT.NO.	ECN NO/CHANGES	DATE	BY	CHKD	APPD

PRODUCT	MUMBAI METRO CARS L2&L7		
REF DRG			
MATERIAL			
HEAT TREAT.		APPD	VS
SURFACE TREAT.		REVD	
TITLE	CLEAT ASSY	CHKD	SNH
		DRWN	VISHNU 27.11.19
		SCALE	SHEET OF
			Wt.(Kg) 0
BEML LIMITED		DRG No.	525-56164
		ALT	

A3

SURFACE ROUGHNESS

GRADE No.	N1	N2	N3	N4	N5	N6	N7	N8	N9	N10	N11	N12
VALUE	0.025	0.05	0.1	0.2	0.4	0.8	1.6	3.2	6.3	12.5	25	50
SYMBOL												

COPY RIGHT & CONFIDENTIAL THIS DOCUMENT IS THE EXCLUSIVE PROPERTY OF BEML & CONTAINS CONFIDENTIAL INFORMATION. THIS DOCUMENT OR ITS CONTENTS SHALL NOT BE USED, REPRODUCED OR DISCLOSED IN WHOLE OR IN PART, WITHOUT PRIOR WRITTEN PERMISSION OF BEML. THIS DOCUMENT & ALL ITS COPIES SHALL BE RETURNED TO BEML ON DEMAND DRAWING RELEASED FROM PLM, PHYSICAL SIGNATURE NOT REQUIRED

MACHINING DEVIATIONS FOR LINEAR DIMENSIONS	RANGE	0 - 6	6 - 30	30 - 120	120 - 315	315-1000	1000-2000	2000-4000	ABOVE 4000	RA
	TOLERANCE	±0.1	±0.2	±0.3	±0.5	±0.8	±1.2	±2	±3	~

FOR DIMENSIONAL TOLERANCES OF SHEET METAL PARTS AND WELDED STRUCTURES, REFER STD. RD-227

UNSPECIFIED TOLERANCE FOR LINEAR AND ANGULAR DIMENSIONS REF. IS 2102 (PT-1) (MEDIUM) | QUALITY OF WELD JOINTS REF, RD 230 MEDIUM

VALUES OF SURFACE TEXTURE SHALL BE AS PER COMPANY STD DS. 1012.C.

WELDING SHALL BE CARRIED OUT AS PER IS: 9595-96

STATUS:

UNCONTROLLED

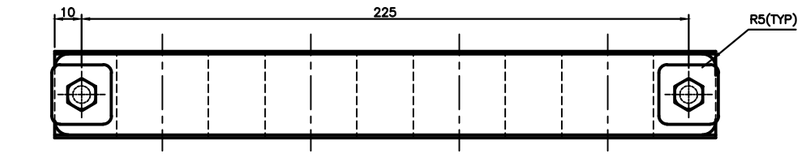

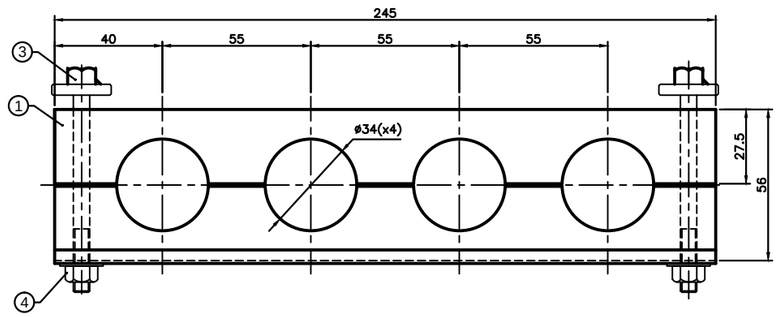

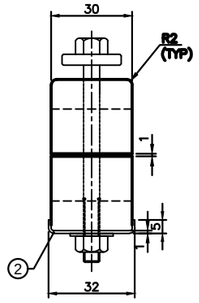

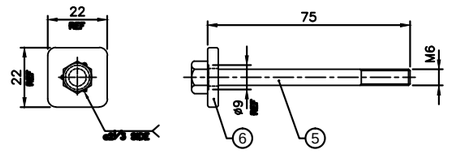

DETAIL-3

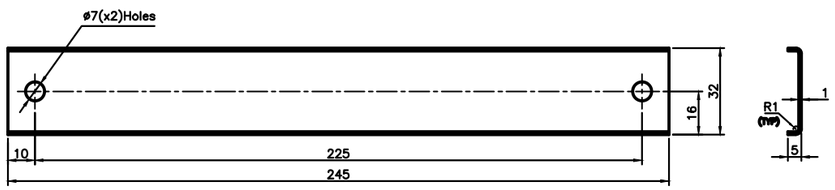

DETAIL-2

NOTE:

1. REMOVE ALL SHARP EDGES
2. FOR CLEATS Min TENSILE STRENGTH: 65 N/mm²
3. BURNING RESISTANCE : SELF EXTINGUISH.
4. ITEM-1 SHALL CONFIRM TO EN45545-HL-3

SL.No.	QTY	PART / STOCK No.	DESCRIPTION	SIZE	COMPANY STD./I.S	Wt. (Kg)
					MATERIAL	
6	2	555-56360	PAD			
5	2	RFB1420675	HEX.HD.BOLT M6x75 TO IS:1364(Pt-3)-2002/ Matl.IS:1367(P14)-84 Gr.A2-70,STAINLESS STEEL WITH PRE APPLIED ADHESIVE			
4	2	RFN5540652	HEX. NUT WITH FLANGE M6 TO ISO 7044-83/ Matl.IS:1367(P14)-84 Gr.A2-70,STAINLESS STEEL			
3	2	525-56165-3	T-BOLT ASSY		ASSY	
2	1	525-56165-2	PLATE	t2	AISI 304	
1	2	525-56165-1	CLEAT		NYLON6	

ALT.NO.	ECN NO/CHANGES	DATE	BY	CHKD	APPD

PRODUCT: MUMBAI METRO CARS L2&L7

REF DRG

MATERIAL

HEAT TREAT.

SURFACE TREAT.

TITLE: CLEAT ASSY, PG29x4

APPD	VS	
REVD		
CHKD	SNH	
DRWN	VISHNU	27.11.19
SCALE	SHEET	Wt.(Kg)
	OF	0

BEML LIMITED

DRG No. 525-56165

ALT

A3

GRADE No.	N1	N2	N3	N4	N5	N6	N7	N8	N9	N10	N11	N12
VALUE	0.025	0.05	0.1	0.2	0.4	0.8	1.6	3.2	6.3	12.5	25	50
SYMBOL												

SURFACE ROUGHNESS

COPY RIGHT & CONFIDENTIAL THIS DOCUMENT IS THE EXCLUSIVE PROPERTY OF BEML & CONTAINS CONFIDENTIAL INFORMATION. THIS DOCUMENT OR ITS CONTENTS SHALL NOT BE USED, REPRODUCED OR DISCLOSED IN WHOLE OR IN PART, WITHOUT PRIOR WRITTEN PERMISSION OF BEML. THIS DOCUMENT & ALL ITS COPIES SHALL BE RETURNED TO BEML ON DEMAND
DRAWING RELEASED FROM PLM, PHYSICAL SIGNATURE NOT REQUIRED

UNCONTROLLED

MACHINING DEVIATIONS FOR LINEAR DIMENSIONS	RANGE	0 - 6	6 - 30	30 - 120	120 - 315	315-1000	1000-2000	2000-4000	ABOVE 4000	RA
	TOLERANCE	±0.1	±0.2	±0.3	±0.5	±0.8	±1.2	±2	±3	~

FOR DIMENSIONAL TOLERANCES OF SHEET METAL PARTS AND WELDED STRUCTURES, REFER STD. RD-227

UNSPECIFIED TOLERANCE FOR LINEAR AND ANGULAR DIMENSIONS REF. IS 2102 (PT-1) (MEDIUM) | QUALITY OF WELD JOINTS REF, RD 230 MEDIUM

VALUES OF SURFACE TEXTURE SHALL BE AS PER COMPANY STD DS. 1012.C.

WELDING SHALL BE CARRIED OUT AS PER IS: 9595-96

STATUS:

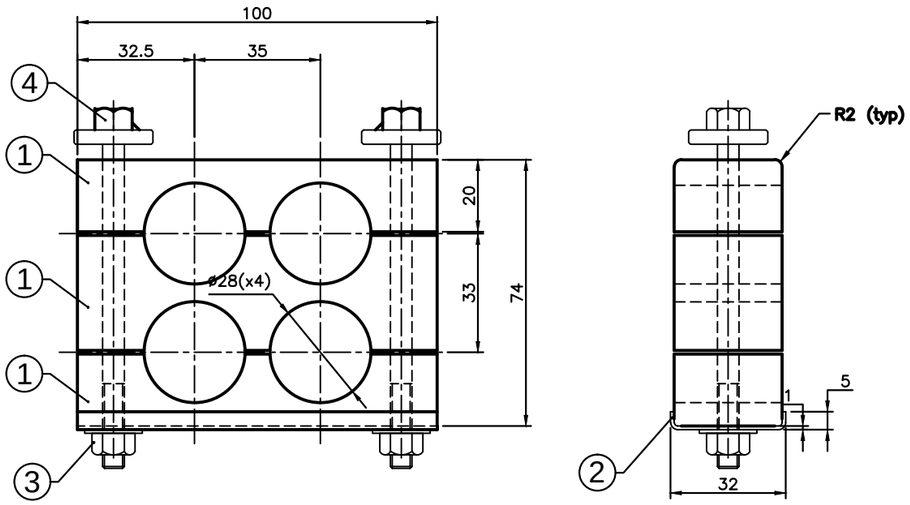

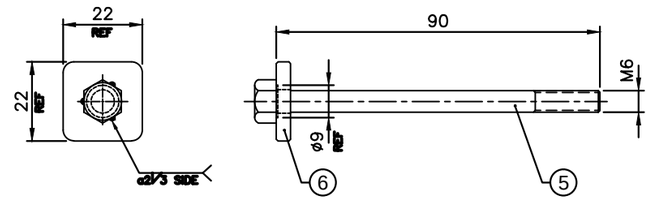

DETAIL-3

NOTE:

1. REMOVE ALL SHARP EDGES
2. FOR CLEATS Min TENSILE STRENGTH: 65 N/mm²
3. BURNING RESISTANCE : SELF EXTINGUISH.
4. ITEM-1 SHALL CONFIRM TO EN45545-HL-3

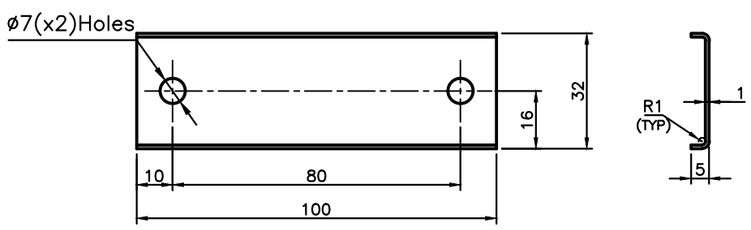

DETAIL-2

SL.No.	QTY	PART / STOCK No.	DESCRIPTION	SIZE	COMPANY STD./I.S / MATERIAL	Wt. (Kg)
6	2	555-56360	PAD			
5	2	RFB1421600	HEX.HD.BOLT M6x100 TO IS:1364(Pt-3)-2002/ Matl.:-IS-1367(P14)-84 Gr A2-70, STAINLESS STEEL WITH PRE APPLIED ADHESIVE			
4	2	RFN5540652	HEX. NUT WITH FLANGE M6 TO ISO 7044-83/ Matl.:-IS-1367(P14)-84 Gr A2-70, STAINLESS STEEL			
3	2	525-56166-3	T-BOLT ASSY		ASSY	
2	1	525-56166-2	PLATE	t1	AISI 304	
1	1 set	525-56166-1	CLEAT		NYLON6	

ALT.NO.	ECN NO/CHANGES	DATE	BY	CHKD	APPD

PRODUCT: MUMBAI METRO CARS L2&L7

REF DRG

MATERIAL

HEAT TREAT.

SURFACE TREAT.

TITLE: CLEAT ASSY PG21x4

APPD	VS	
REVD		
CHKD	SNH	
DRWN	VISHNU	27.11.19
SCALE	SHEET / OF	Wt.(Kg) 0

BEML LIMITED

DRG No. 525-56166

ALT

A3

GRADE No.	N1	N2	N3	N4	N5	N6	N7	N8	N9	N10	N11	N12
VALUE	0.025	0.05	0.1	0.2	0.4	0.8	1.6	3.2	6.3	12.5	25	50
SYMBOL												

SURFACE ROUGHNESS

COPY RIGHT & CONFIDENTIAL THIS DOCUMENT IS THE EXCLUSIVE PROPERTY OF BEML & CONTAINS CONFIDENTIAL INFORMATION. THIS DOCUMENT OR ITS CONTENTS SHALL NOT BE USED, REPRODUCED OR DISCLOSED IN WHOLE OR IN PART, WITHOUT PRIOR WRITTEN PERMISSION OF BEML. THIS DOCUMENT & ALL ITS COPIES SHALL BE RETURNED TO BEML ON DEMAND DRAWING RELEASED FROM PLM, PHYSICAL SIGNATURE NOT REQUIRED

MACHINING DEVIATIONS FOR LINEAR DIMENSIONS	RANGE	0 - 6	6 - 30	30 - 120	120 - 315	315-1000	1000-2000	2000-4000	ABOVE 4000	RA
	TOLERANCE	±0.1	±0.2	±0.3	±0.5	±0.8	±1.2	±2	±3	~

FOR DIMENSIONAL TOLERANCES OF SHEET METAL PARTS AND WELDED STRUCTURES, REFER STD. RD-227

UNSPECIFIED TOLERANCE FOR LINEAR AND ANGULAR DIMENSIONS REF. IS 2102 (PT-1) (MEDIUM) | QUALITY OF WELD JOINTS REF. RD 230 MEDIUM

VALUES OF SURFACE TEXTURE SHALL BE AS PER COMPANY STD DS. 1012.C.

WELDING SHALL BE CARRIED OUT AS PER IS: 9595-96

STATUS:

UNCONTROLLED

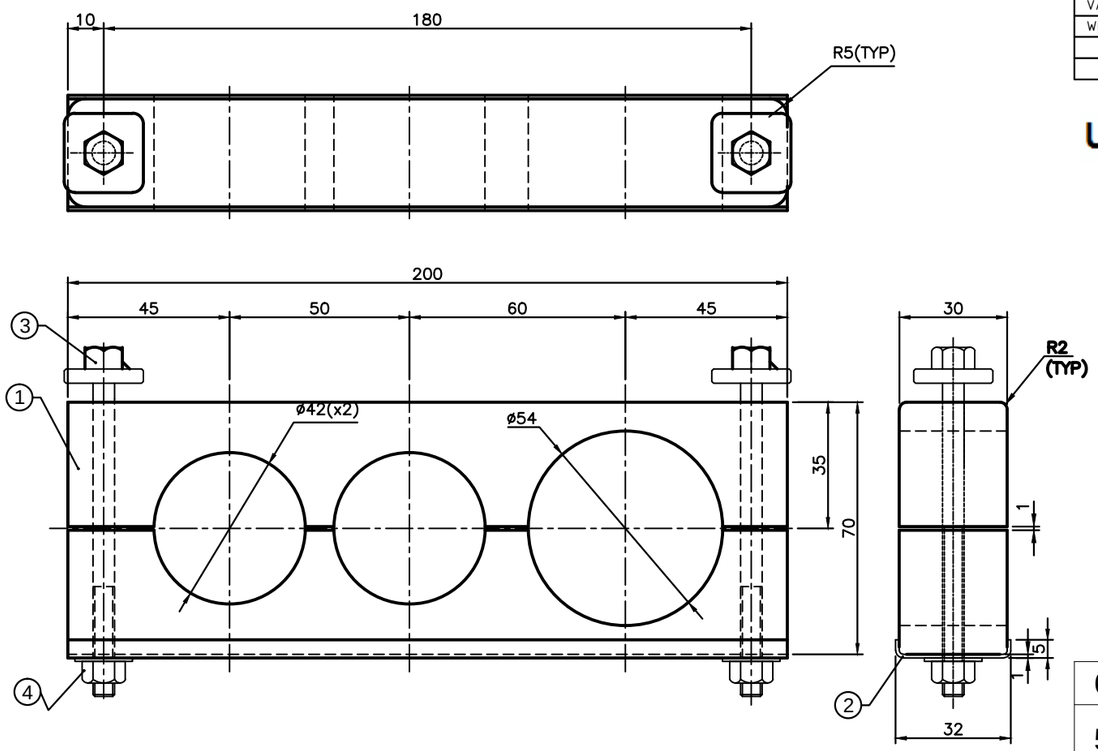

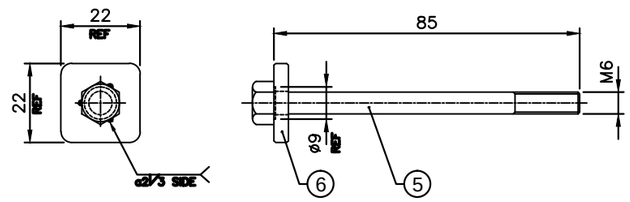

DETAIL-3

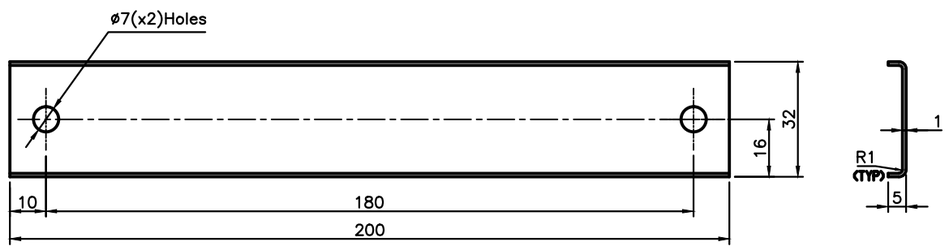

DETAIL-2

NOTE:

1. REMOVE ALL SHARP EDGES
2. FOR CLEATS Min TENSILE STRENGTH: 65 N/mm²
3. BURNING RESISTANCE : SELF EXTINGUISH.
4. ITEM-1 SHALL CONFIRM TO EN45545-HL-3

SL.No.	QTY	PART / STOCK No.	DESCRIPTION	SIZE	COMPANY STD./I.S / MATERIAL	Wt. (Kg)
6	2	555-56360	PAD			
5	2	RFB1420685	HEX.HD.BOLT M6x85 TO IS:1364(Pt-3)-2002/ Matl.:-IS-1367(P14)-84 Gr A2-70, STAINLESS STEEL WITH PRE APPLIED ADHESIVE			
4	2	RFN5540652	HEX. NUT WITH FLANGE M6 TO ISO 7044-83/ Matl.:-IS-1367(P14)-84 Gr A2-70, STAINLESS STEEL			
3	2	525-56167-3	T-BOLT ASSY		ASSY	
2	1	525-56167-2	PLATE	t1	AISI 304	
1	2	525-56167-1	CLEAT		NYLON6	

ALT.NO.	ECN NO/CHANGES	DATE	BY	CHKD	APPD

PRODUCT: MUMBAI METRO CARS L2 & L7

REF DRG:

MATERIAL:

HEAT TREAT.:

SURFACE TREAT.:

TITLE: CLEAT ASSY, PG36XPG36XPG48

APPD: VS

REVD:

CHKD: SNH

DRWN: JAGADISH 29.08.19

SCALE: SHEET: OF: Wt.(Kg): 0

BEML LIMITED

DRG No. 525-56167

ALT

A3

GRADE No.	N1	N2	N3	N4	N5	N6	N7	N8	N9	N10	N11	N12
VALUE	0.025	0.05	0.1	0.2	0.4	0.8	1.6	3.2	6.3	12.5	25	50
SYMBOL												

SURFACE ROUGHNESS

COPY RIGHT & CONFIDENTIAL THIS DOCUMENT IS THE EXCLUSIVE PROPERTY OF BEML & CONTAINS CONFIDENTIAL INFORMATION. THIS DOCUMENT OR ITS CONTENTS SHALL NOT BE USED, REPRODUCED OR DISCLOSED IN WHOLE OR IN PART, WITHOUT PRIOR WRITTEN PERMISSION OF BEML. THIS DOCUMENT & ALL ITS COPIES SHALL BE RETURNED TO BEML ON DEMAND DRAWING RELEASED FROM PLM, PHYSICAL SIGNATURE NOT REQUIRED

MACHINING DEVIATIONS FOR LINEAR DIMENSIONS	RANGE	0 - 6	6 - 30	30 - 120	120 - 315	315-1000	1000-2000	2000-4000	ABOVE 4000	RA
	TOLERANCE	±0.1	±0.2	±0.3	±0.5	±0.8	±1.2	±2	±3	~

FOR DIMENSIONAL TOLERANCES OF SHEET METAL PARTS AND WELDED STRUCTURES, REFER STD. RD-227

UNSPECIFIED TOLERANCE FOR LINEAR AND ANGULAR DIMENSIONS REF. IS 2102 (PT-1) (MEDIUM) | QUALITY OF WELD JOINTS REF, RD 230 MEDIUM

VALUES OF SURFACE TEXTURE SHALL BE AS PER COMPANY STD DS. 1012.C.

WELDING SHALL BE CARRIED OUT AS PER IS: 9595-96

STATUS:

UNCONTROLLED

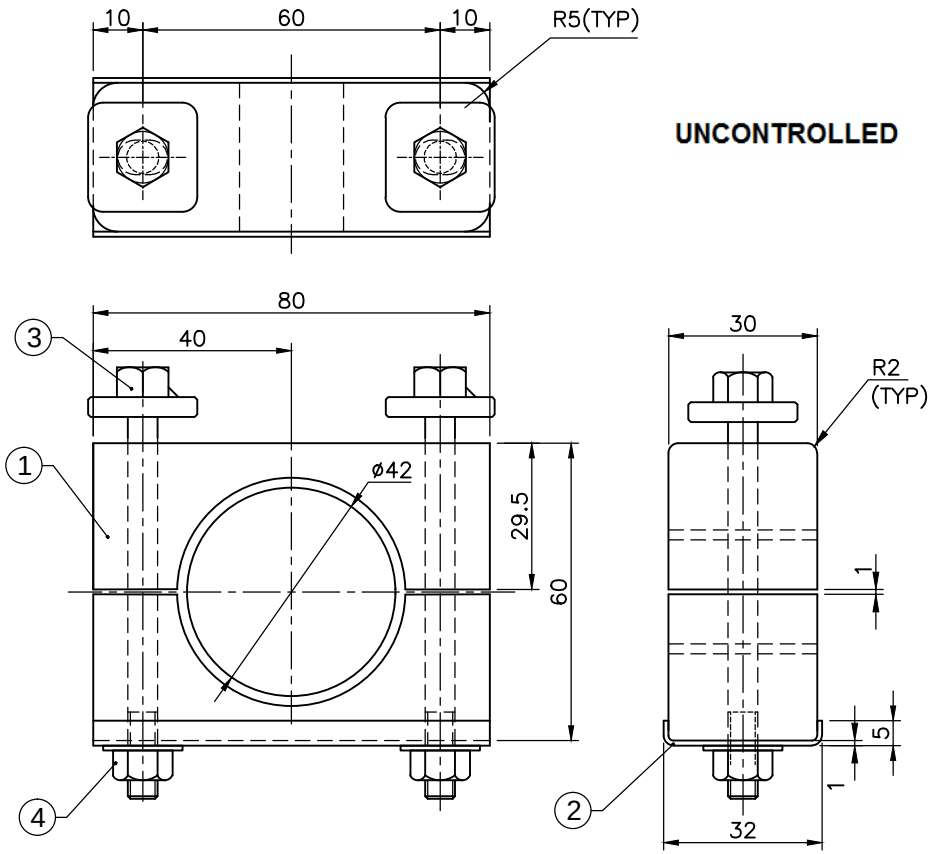

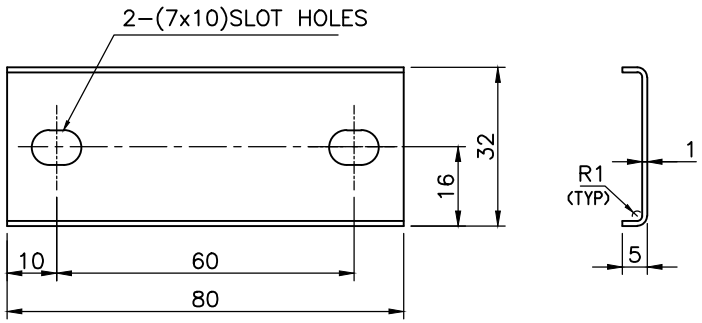

DETAIL-2

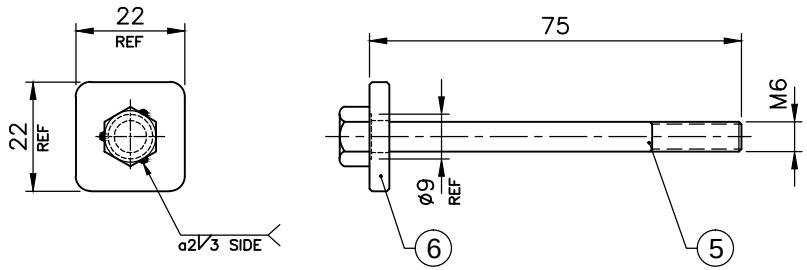

DETAIL-3

NOTE:

1. REMOVE ALL SHARP EDGES
2. FOR CLEATS Min TENSILE STRENGTH: 65 N/mm²
3. BURNING RESISTANCE : SELF EXTINGUISH.
4. ITEM-1&7 SHALL CONFIRM TO EN45545-HL-3

SL.No.	QTY	PART / STOCK No.	DESCRIPTION	SIZE	COMPANY STD./I.S	Wt. (Kg)
7	2	525-56168-7	PROTECTIVE RUBBER	t2	EPDM	
6	2	555-56360	PAD			
5	2	RFB1420675	HEX.HD.BOLT M6x75 TO IS:1364(Pt-3)-2002/ Matl.:-IS-1367(P14)-84 Gr A2-70, STAINLESS STEEL WITH PRE APPLIED ADHESIVE			
4	2	RFN5540652	HEX. NUT WITH FLANGE M6 TO ISO 7044-83/ Matl.:-IS-1367(P14)-84 Gr A2-70, STAINLESS STEEL			
3	2	525-56168-3	T-BOLT ASSY		ASSY	
2	1	525-56168-2	PLATE	t1	AISI 304	
1	2	525-56168-1	CLEAT		NYLON6	
					MATERIAL	

ALT.NO.	ECN NO/CHANGES	DATE	BY	CHKD	APPD

PRODUCT	MUMBAI METRO CARS L2&L7		
REF DRG			
MATERIAL			
HEAT TREAT.		APPD	VS
SURFACE TREAT.		REVD	
TITLE	CLEAT ASSY	CHKD	SNH
		DRWN	VISHNU 27.11.19
		SCALE	SHEET OF / Wt.(Kg) 0
BEML LIMITED		DRG No.	525-56168
		ALT	

A3

GRADE No.	N1	N2	N3	N4	N5	N6	N7	N8	N9	N10	N11	N12
VALUE	0.025	0.05	0.1	0.2	0.4	0.8	1.6	3.2	6.3	12.5	25	50
SYMBOL												

SURFACE ROUGHNESS

MACHINING DEVIATIONS FOR LINEAR DIMENSIONS	RANGE	0 - 6	6 - 30	30 - 120	120 - 315	315-1000	1000-2000	2000-4000	ABOVE 4000	RA
	TOLERANCE	±0.1	±0.2	±0.3	±0.5	±0.8	±1.2	±2	±3	~

FOR DIMENSIONAL TOLERANCES OF SHEET METAL PARTS AND WELDED STRUCTURES, REFER STD. RD-227

UNSPECIFIED TOLERANCE FOR LINEAR AND ANGULAR DIMENSIONS REF. IS 2102 (PT-1) (MEDIUM) | QUALITY OF WELD JOINTS REF, RD 230 MEDIUM

VALUES OF SURFACE TEXTURE SHALL BE AS PER COMPANY STD DS. 1012.C.

WELDING SHALL BE CARRIED OUT AS PER IS: 9595-96

STATUS:

UNCONTROLLED

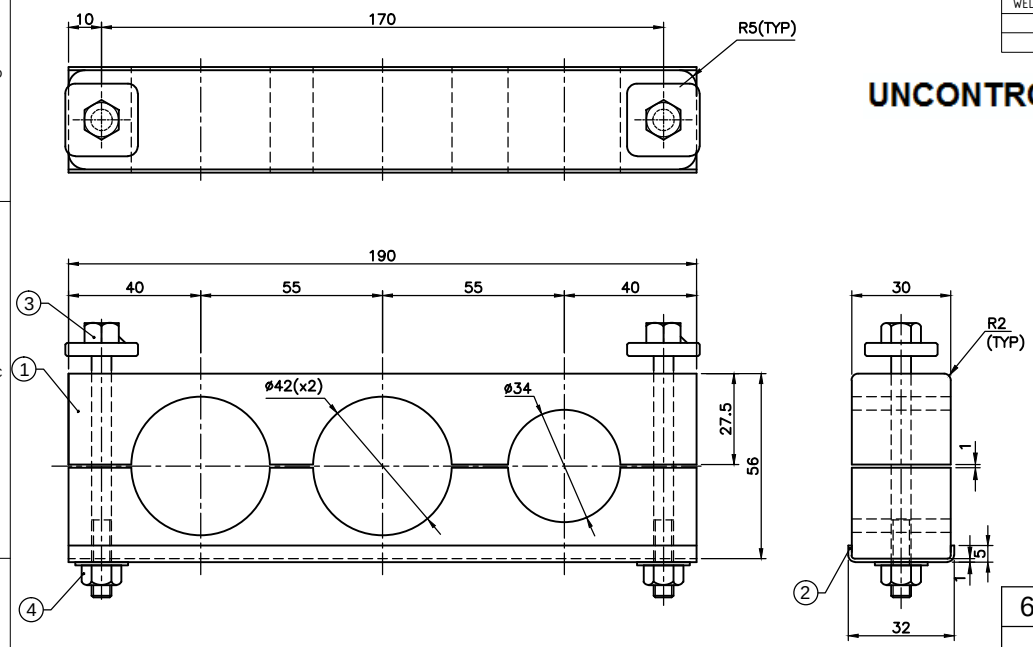

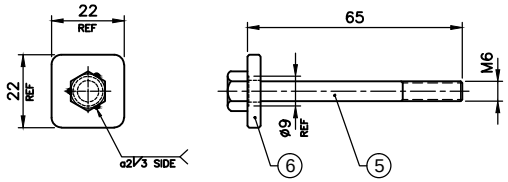

DETAIL-3

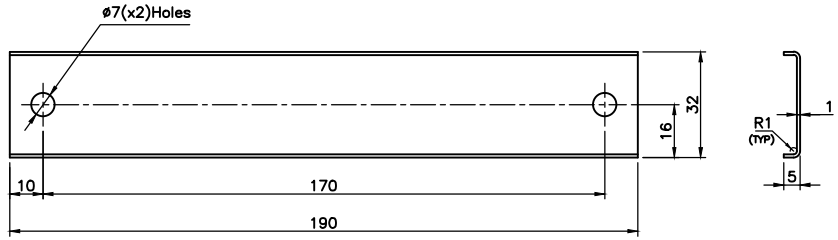

DETAIL-2

NOTE:

1. REMOVE ALL SHARP EDGES
2. FOR CLEATS Min TENSILE STRENGTH: 65 N/mm²
3. BURNING RESISTANCE : SELF EXTINGUISH.
4. ITEM-1 SHALL CONFIRM TO EN45545-HL-3

SL.No.	QTY	PART / STOCK No.	DESCRIPTION	SIZE	COMPANY STD./I.S	Wt. (Kg)
6	2	555-56360	PAD			
5	2	RFB1420665	HEX.HD.BOLT M6x65 TO IS:1364(Pt-3)-2002/ Matl.:-IS-1367(P14)-84 Gr A2-70, STAINLESS STEEL WITH PRE APPLIED ADHESIVE			
4	2	RFN5540652	HEX. NUT WITH FLANGE M6 TO ISO 7044-83/ Matl.:-IS-1367(P14)-84 Gr A2-70, STAINLESS STEEL			
3	2	525-56169-3	T-BOLT ASSY		ASSY	
2	1	525-56169-2	PLATE	t1	AISI 304	
1	2	525-56169-1	CLEAT		NYLON6	

MATERIAL

ALT.NO.	ECN NO/CHANGES	DATE	BY	CHKD	APPD

PRODUCT: MUMBAI METRO CARS L2&L7

REF DRG

MATERIAL

HEAT TREAT.

SURFACE TREAT.

TITLE: CLEAT ASSY PG36xPG29xPG29

APPD: VS

REVD

CHKD: SNH

DRWN: VISHNU 27.11.19

SCALE | SHEET | OF | Wt.(Kg) 0

BEML LIMITED

DRG No. 525-56169

ALT

A3

COPY RIGHT & CONFIDENTIAL THIS DOCUMENT IS THE EXCLUSIVE PROPERTY OF BEML & CONTAINS CONFIDENTIAL INFORMATION. THIS DOCUMENT OR ITS CONTENTS SHALL NOT BE USED, REPRODUCED OR DISCLOSED IN WHOLE OR IN PART, WITHOUT PRIOR WRITTEN PERMISSION OF BEML. THIS DOCUMENT & ALL ITS COPIES SHALL BE RETURNED TO BEML ON DEMAND DRAWING RELEASED FROM PLM, PHYSICAL SIGNATURE NOT REQUIRED

SURFACE ROUGHNESS

GRADE No.	N12	N11	N10	N9	N8	N7	N6	N5	N4	N3	N2	N1
VALUE	50	25	12.5	6.3	3.2	1.6	0.8	0.4	0.2	0.1	0.05	0.025
SYMBOL	~											

COPY RIGHT & CONFIDENTIAL THIS DOCUMENT IS THE EXCLUSIVE PROPERTY OF BEML & CONTAINS CONFIDENTIAL INFORMATION. THIS DOCUMENT OR ITS CONTENTS SHALL NOT BE USED, REPRODUCED OR DISCLOSED IN WHOLE OR IN PART, WITHOUT PRIOR WRITTEN PERMISSION OF BEML. THIS DOCUMENT & ALL ITS COPIES SHALL BE RETURNED TO BEML ON DEMAND DRAWING RELEASED FROM PLM, PHYSICAL SIGNATURE NOT REQUIRED

MACHINING DEVIATIONS FOR LINEAR DIMENSIONS	RANGE	0 - 6	6 - 30	30 - 120	120 - 315	315-1000	1000-2000	2000-4000	ABOVE 4000	RA
	TOLERANCE	±0.1	±0.2	±0.3	±0.5	±0.8	±1.2	±2	±3	~

FOR DIMENSIONAL TOLERANCES OF SHEET METAL PARTS AND WELDED STRUCTURES, REFER STD. RD-227

UNSPECIFIED TOLERANCE FOR LINEAR AND ANGULAR DIMENSIONS REF. IS 2102 (PT-1) (MEDIUM) | QUALITY OF WELD JOINTS REF, RD 230 MEDIUM

VALUES OF SURFACE TEXTURE SHALL BE AS PER COMPANY STD DS. 1012.C.

WELDING SHALL BE CARRIED OUT AS PER IS: 9595-96

STATUS:

UNCONTROLLED

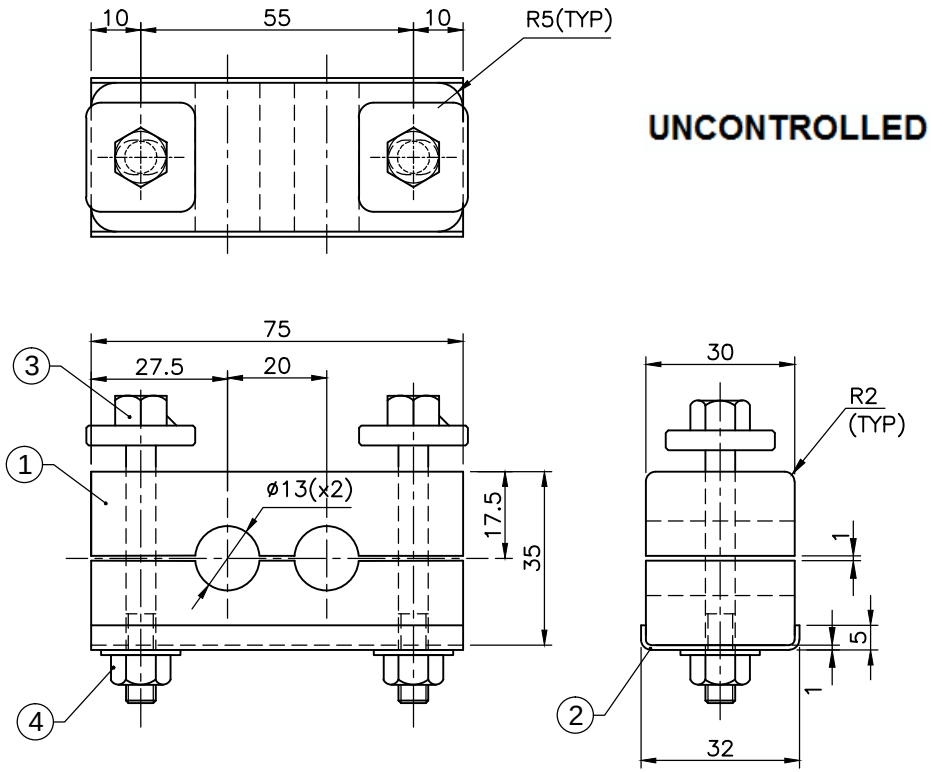

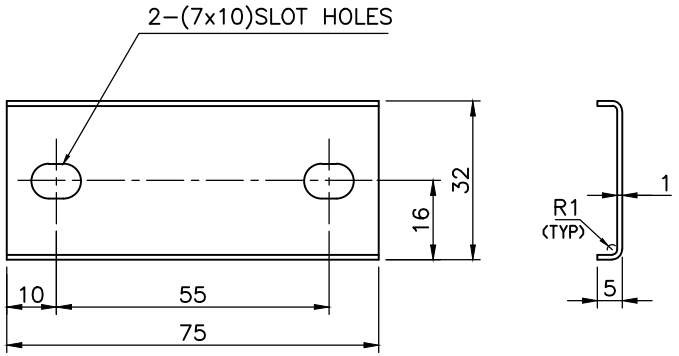

DETAIL-2

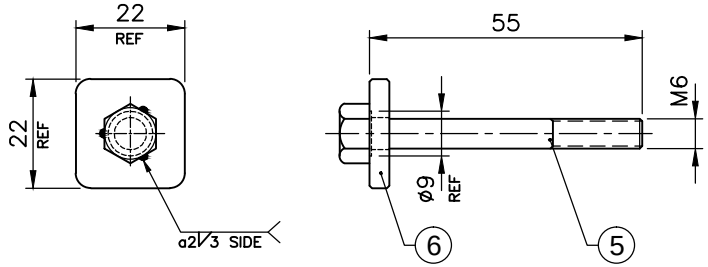

DETAIL-3

NOTE:

1. REMOVE ALL SHARP EDGES
2. FOR CLEATS Min TENSILE STRENGTH: 65 N/mm²
3. BURNING RESISTANCE : SELF EXTINGUISH.
4. ITEM-1 SHALL CONFIRM TO EN45545-HL-3

SL.No.	QTY	PART / STOCK No.	DESCRIPTION	SIZE	COMPANY STD./I.S	Wt. (Kg)
6	2	555-56360	PAD			
5	2	RFB1420655	HEX.HD.BOLT M6x55 TO IS:1364(Pt-3)-2002/ Matl.:-IS-1367(P14)-84 Gr A2-70, STAINLESS STEEL WITH PRE APPLIED ADHESIVE			
4	2	RFN5540652	HEX. NUT WITH FLANGE M6 TO ISO 7044-83/ Matl.:-IS-1367(P14)-84 Gr A2-70, STAINLESS STEEL			
3	2	525-56170-3	T-BOLT ASSY		ASSY	
2	1	525-56170-2	PLATE	t1	AISI 304	
1	2	525-56170-1	CLEAT		NYLON6	
					MATERIAL	

ALT.NO.	ECN NO/CHANGES	DATE	BY	CHKD	APPD

PRODUCT: MUMBAI METRO CARS L2&L7

REF DRG

MATERIAL

HEAT TREAT.

SURFACE TREAT.

TITLE: CLEAT ASSY- PG9x2

APPD: VS

REVD

CHKD: SNH

DRWN: VISHNU 27.11.19

SCALE | SHEET | OF | Wt.(Kg) 0

BEML LIMITED

DRG No. 525-56170

ALT

A3

GRADE No.	N1	N2	N3	N4	N5	N6	N7	N8	N9	N10	N11	N12
VALUE	0.025	0.05	0.1	0.2	0.4	0.8	1.6	3.2	6.3	12.5	25	50
SYMBOL												

SURFACE ROUGHNESS

COPY RIGHT & CONFIDENTIAL THIS DOCUMENT IS THE EXCLUSIVE PROPERTY OF BEML & CONTAINS CONFIDENTIAL INFORMATION. THIS DOCUMENT OR ITS CONTENTS SHALL NOT BE USED, REPRODUCED OR DISCLOSED IN WHOLE OR IN PART, WITHOUT PRIOR WRITTEN PERMISSION OF BEML. THIS DOCUMENT & ALL ITS COPIES SHALL BE RETURNED TO BEML ON DEMAND DRAWING RELEASED FROM PLM, PHYSICAL SIGNATURE NOT REQUIRED

MACHINING DEVIATIONS FOR LINEAR DIMENSIONS	RANGE	0 - 6	6 - 30	30 - 120	120 - 315	315-1000	1000-2000	2000-4000	ABOVE 4000	RA
	TOLERANCE	±0.1	±0.2	±0.3	±0.5	±0.8	±1.2	±2	±3	~

FOR DIMENSIONAL TOLERANCES OF SHEET METAL PARTS AND WELDED STRUCTURES, REFER STD. RD-227

UNSPECIFIED TOLERANCE FOR LINEAR AND ANGULAR DIMENSIONS REF. IS 2102 (PT-1) (MEDIUM) | QUALITY OF WELD JOINTS REF, RD 230 MEDIUM

VALUES OF SURFACE TEXTURE SHALL BE AS PER COMPANY STD DS. 1012.C.

WELDING SHALL BE CARRIED OUT AS PER IS: 9595-96

STATUS:

UNCONTROLLED

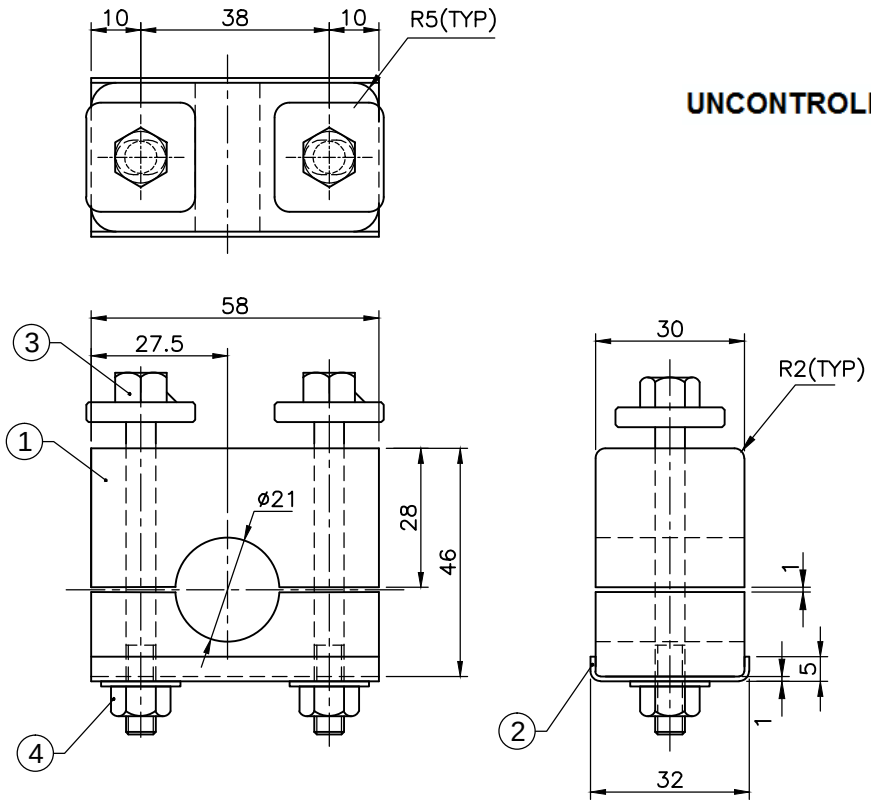

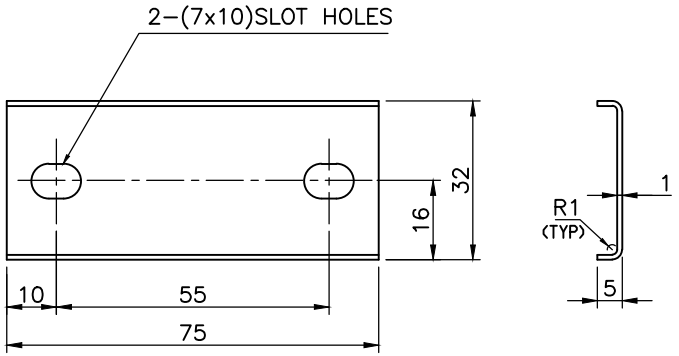

DETAIL-2

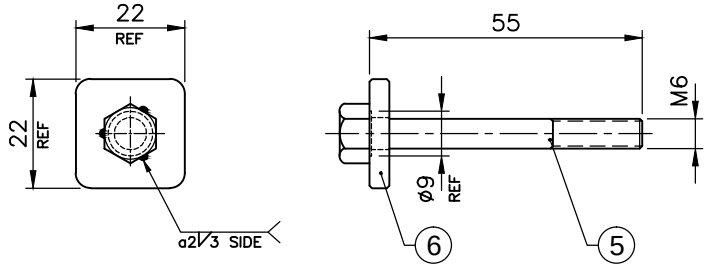

DETAIL-3

NOTE:

1. REMOVE ALL SHARP EDGES
2. FOR CLEATS Min TENSILE STRENGTH: 65 N/mm²
3. BURNING RESISTANCE : SELF EXTINGUISH.
4. ITEM-1 SHALL CONFIRM TO EN45545-HL-3

SL.No.	QTY	PART / STOCK No.	DESCRIPTION	SIZE	COMPANY STD./I.S	Wt. (Kg)
6	2	555-56360	PAD			
5	2	RFB1420655	HEX.HD.BOLT M6x55 TO IS:1364(Pt-3)-2002/ Matl.:-IS-1367(P14)-84 Gr A2-70, STAINLESS STEEL WITH PRE APPLIED ADHESIVE			
4	2	RFN5540652	HEX. NUT WITH FLANGE M6 TO ISO 7044-83/ Matl.:-IS-1367(P14)-84 Gr A2-70, STAINLESS STEEL			
3	2	525-56171-3	T-BOLT ASSY		ASSY	
2	1	525-56171-2	PLATE	t1	AISI 304	
1	2	525-56171-1	CLEAT		NYLON6	
					MATERIAL	

ALT.NO.	ECN NO/CHANGES	DATE	BY	CHKD	APPD

PRODUCT: MUMBAI METRO CARS L2&L7

REF DRG

MATERIAL

HEAT TREAT.

SURFACE TREAT.

TITLE: CLEAT ASSY

APPD: VS

REVD

CHKD: SNH

DRWN: VISHNU 27.11.19

SCALE | SHEET | OF | Wt.(Kg) 0

BEML LIMITED

DRG No. 525-56171

ALT

A3

GRADE No.	N1	N2	N3	N4	N5	N6	N7	N8	N9	N10	N11	N12
VALUE	0.025	0.05	0.1	0.2	0.4	0.8	1.6	3.2	6.3	12.5	25	50
SYMBOL												

SURFACE ROUGHNESS